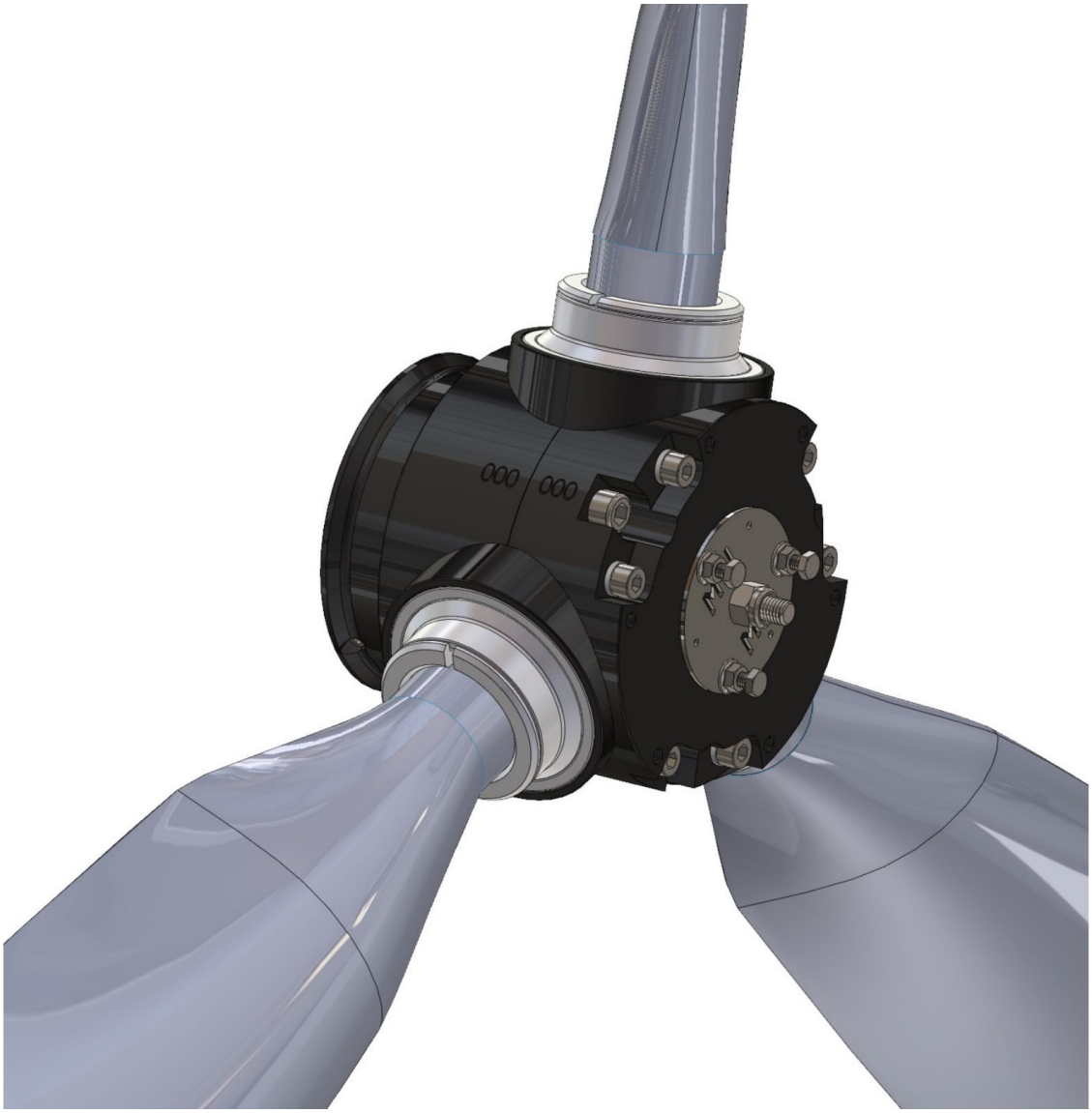

Manual for installation, use and maintenance of HydroPitch variable pitch propellers

The use of the propeller in flight certifies that the user has read and understood the contents of the installation manual and the operating manual. Failure to follow the instructions contained herein can cause serious injury and even death.
Refer to the aircraft instruction manual for additional information.

All information, illustrations, instructions and technical data contained in this manual are update at the issue date. MWfly reserves the right to make changes at any time, without notice and without incurring any obligation. The reproduction of any part of this publication without the written authorization of MWfly is prohibited.
This manual is an integral part of the propeller, and must be delivered together with it in case of sale.
The original document is written in Italian, which is authentic for any dispute of a technical or legal nature.

1. SUMMARY

2. INTRODUCTION 7

2.1. Premise 7

2.2. Notes for Consultation 7

2.3. Identification Data 9

2.4. Tools 9

2.5. Consumables 10

2.6. MWfly Authorized Service Centres 11

3. SAFETY 12

3.1. Premise 12

3.2. Security Elements 12

3.3. Use of Technical Documentation 14

4. DESCRIPTION 16

4.1. Intended Use 16

4.2. General Characteristics 17

4.2.1. Fixing Hole 18

4.2.2. Rotation Direction 19

4.3. Available Version 21

4.4. Control System 21

4.4.1. Closed Circuit System 21

4.4.2. Open Circuit System 22

5. INSTALLATION 23

5.1. Shipping Conditions 23

5.2. Assembly 26

5.3. Mounting on the Engine Flange 31

5.3.1. Precaution 31

5.3.2. Spacer 31

5.3.3. Instruction 32

5.4. Controls and Adjustments 34

5.4.1. Blades Tracking 34
5.4.2. Pitch Error 37
5.4.3. Minimum Pitch Setting 39
5.4.4. Maximum Pitch Setting 41
5.5. System Vent 44
5.6. Installing the Spinner 45
5.7. Installation Test 48
5.7.1. Dynamic Balancing 49
6. OPERATING INSTRUCTIONS 51
6.1. General Criteria for Use 51
6.1.1. Before Starting 51
6.1.2. Before Flight 52
6.1.3. Take-off 53
6.1.4. Cruise 53
6.1.5. Landing 53
6.2. Behavior in Case of Emergency 53
6.3. Communication of Operating Anomalies 55
7. MAINTENANCE 57
7.1. Premise 57
7.2. General Rules for Maintenance 58
7.3. Propeller Logbook 59
7.4. Control Tightening Torques 59
7.5. Scheduled Maintenance 60
7.5.1. Cleaning 61
7.5.2. Propeller Functional Check 63
7.5.3. Check the Integrity of the Blade 64
7.5.4. Propeller Removal 65
7.5.5. Removing the Blades from the Hub 66
7.5.6. Overhaul of the Blade Group 68

7.5.7. Reduction of the Blade Play in the Hub 70
7.5.8. Reduction of the Blade Play on the Pitch 71
7.5.9. Greasing 72
7.5.10. Sliding Pads Replacement 74
7.5.11. Seals Replacement 76
7.5.12. Replacement of Bearing 77
7.6. Unscheduled Maintenance 79
7.6.1. Impact or Suspected Impact with Foreign Bodies 80
7.6.2. Electrocution 80
7.6.3. Strong Vibration During the Flight 81
7.6.4. Overspeed 81
7.7. Preservation and Resumption of Service After Prolonged Inactivity 81
7.8. Precautions for Use in Extreme Environments 82
8. SIGNATURES AND LIST OF REVISIONS TO THE DOCUMENT 83

2. INTRODUCTION

Read this manual carefully before using the propeller and apply all the safety rules contained therein, in addition to those that experience and common sense suggest.
Remember that regular maintenance and thorough inspection before take-off are essential safety factors.
MWfly will be happy to provide you with further information and any assistance you may need

2.1. Premise

Before using the propeller, it is necessary to understand all the contents of this manual.

In case any passage is difficult to understand or in case of doubts, please contact MWfly or an authorized centre in writing, requesting clarification.

It is also necessary to add to the contents of this chapter with what is prescribed and recommended by the aircraft manufacturer as well as suggested by one's own experience.

⚠ **This propeller has not received any certification for suitability for aeronautical use.**
Its use is intended exclusively for experimental or non-certified aircraft, on which any engine failure does not compromise flight safety.

Use the propeller in accordance with the rules and laws in force.

2.2. Notes for Consultation

The original language in which this document was issue is Italian: Italian is the reference language for any dispute.

The manual is divided into sections; each section is divided into chapters; each chapter is divided into paragraphs; within each paragraph there may be a further subdivision into topics. The title of each section, chapter, paragraph or topic is highlighted as follows.

SECTION

Chapter

Paragraph

Topic

The numbering of the contents of the manual consists of an alpha-numeric code that follows the following criterion.

6.1.3.

- The first number indicates the section.
- The second number indicates the chapter of each section.
- The third number indicates the paragraph of each chapter; it is not always present.

The naming of the figures follows the same criteria for the first two parts; the third part invariably represents the cardinal numbering of the figure itself; the letter P is added at the end of the code (e.g. 5.2.2.P).

The naming of the tables follows the same criteria for the first two parts; the third part invariably represents the cardinal numbering of the table itself; the letter C is added at the end of the code (e.g. 4.3.1.C).

The measurement system used in the manuals is the technical system (ST); in the tables the unit of measurement of the quantities represented is indicated enclosed in square brackets [].

The symbols used in the manuals are as follows.

WARNING: Not following this instruction can cause severe personal injury or loss of life.

CAUTION: Not following this instruction could cause severe damage to the propeller.

INFORMATION: Refers to supplementary information to completely or fully understand the instruction.

1., 2., ... This numbering is used to list tools and consumables needed to run an installation or maintenance; it is also used to bring in parts lists or engine parts shown in the illustrations.

a., **b.**, ... This lettering is used to indicate a list of actions or subjects with relation to inclusion: all of the actions or options listed must be verified.

- ○ This symbol is used to indicate a list of actions or subjects with relation to exclusion: only one of the actions or options listed with this symbol must be verified.
- • This symbol is used to list the general characteristics of the engine, component specifications or options for installation or maintenance.

2.3. Identification Data

The serial number of the propeller is printed on an indelible label, applied on the rear side of the hub, and consists of an alpha-numeric code divided into 2 fields of six digits each: the first field indicates the model and the second field indicates the serial number.
Changing or deleting this code causes the immediate revocation of the guarantee and frees MWfly from any obligation towards the user.
For any request for information or spare parts it is necessary to indicate the model and serial number of the product.

2.4. Tools

The standard workshop tools and tools (not included with the propeller supply) specifically designed to carry out installation and routine maintenance on the propeller are listed below. The same equipment is listed and numbered at the beginning of each paragraph describing operations: the number will be recalled in square brackets to indicate the use of the associated equipment, in the specific action; in the case of combined use of several tools, they will be recalled separated by the semicolon sign; in the case of combined use of torque wrench and insert, they will be recalled separated by the + sign

Standards workshop tools

- Allen key 3mm
- Allen key 4mm
- Allen key 5mm
- Allen key 6mm
- Allen key 8mm
- Hexagonal wrench 10mm
- Open end wrench ¾”
- Bi-hex socket wrench 17mm
- Wrench for spark plug

- Punch with flat tip and 13.5mm diameter
- Punch with flat tip and20mm diameter
- Hammer 500 gr
- Torque wrench 0 – 50Nm
- feeler gauge 0.05mm a 0.5mm
- Digital caliper
- Digital inclinometer
- Flexible meter

If the use of a torque wrench is prescribed in the description of the maintenance operations, the corresponding inserts necessary to perform torque tightening must be added to all the tools listed.

Special Tools

- Extraction bushing with internal diameter of 15mm
- Wrench for tightening the blade retaining ring nut cod. X459

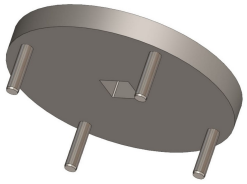

2.5. Consumables

Use only the specified components and consumables, or technically equivalent components and materials for carrying out maintenance work; spare parts must be original in order not to void the warranty and not to compromise reliability and safety.

When using chemical materials, it is necessary to comply with the local legislation in force for disposal, as they are special waste. When using, take the utmost care to protect yourself and the environment from possible contamination.

- Aeroshell grease 22 or equivalent
- Weak threadlocker
- Medium threadlocker
- Pencil
- Masking tape
- Car shampoo

- Silicone-free car wax
- Remove midges for motorcycle helmets
- Teflon spray

The consumables are also listed and numbered at the beginning of each paragraph describing maintenance operations and referred to during the description of the maintenance phases.

2.6. MWfly Authorized Service Centres

For further information on maintenance or spare parts service, please contact the nearest MWfly service centre.

3. SAFETY

3.1. Premise

Just reading this manual will not eliminate the hazards connected with the installation and use of the product. However, the understanding and application of the information herein is essential to use the propeller in a proper and safe way, and reduces the causes of potential risk.
The information, components, system descriptions, pictures, tables and technical data contained in the present manual are correct at the time of publication. MWfly, however, maintains a policy of continuous improvement of its products without imposing upon itself any obligation to install them on its products previously manufactured: should such an eventuality arise, MWfly, through its distribution and assistance network, as well as through the website www.mwfly.it, will disclose the mandatory nature of any update.
The choice to install and use this propeller is entirely subject to the discretion and responsibility of the manufacturer, assembler and owner of the aircraft: MWfly cannot guarantee the suitability for use of the product on each specific type of aircraft due to the variety of design and project to which the aircraft themselves are subject; for this reason MWfly is not responsible, nor can it issue any form of guarantee regarding components, accessories or parts of the aircraft that may be damaged during the installation or operation of the propeller. The user assumes all risks arising from the use of the product and acknowledges that he is aware of the above.
MWfly reserves the right to make changes at any time, without notice and without incurring any obligation. No part of this publication may be reproduced without written permission.

3.2. Security Elements

For your safety, here are some important tips, suggested by common sense and by the usual norms of prudence, without however being able include all of the situations or behaviours that constitute opportunities for potential risk.

⚠ **Frequently check the attachment of the propeller to the engine flange.**

The prescribed tightening torques must be strictly observed to avoid the risk of detachment of components during the use of the engine: non-compliance invalidates all forms of warranty and automatically releases MWfly from any liability.

Always carry out an adequate inspection before starting the engine: this helps prevent accidents or damage. In case of doubt about the efficiency of the propeller, do not fly.

Never leave the aircraft while the engine is running.

This propeller is not suitable for aerobatic flight.

Always keep the propeller in perfect working order by following the maintenance table contained in the maintenance manual and carrying out the servicing at the scheduled intervals.

Write down any operating anomalies in the propeller logbook. Never fly before you have solved the problem and noted the correction in the logbook.

To use the propeller, strictly comply with all national and local laws and regulations.

Do not under any circumstances exceed the maximum number of revolutions envisaged.

This propeller has received no airworthiness certification. Its use is intended exclusively for experimental or non-certified aircraft, on which any failure does not compromise flight safety. The user assumes all risks arising from the use of the propeller and acknowledges that he is aware of the above.

Before starting the engine, make sure that each component of the propeller is firmly fixed, in order to prevent it from being accidentally lost in flight.

The propeller must be used only by users trained and authorized for the purpose, as well as informed about the potential hazards arising from its use.

The description and illustration of components or parts of the propeller refers to the configuration at the time of publication of the manual. The sole purpose of the illustrations is to allow the identification of the parts and to assist in the operations: they are therefore not to be interpreted as technical drawings or as representations of reality.

If there are divergences between what is specified in this manual and the current technical legislation, you must proceed according to the most stringent rule.

3.3. Use of Technical Documentation

The technical documentation and the directives are to be considered the necessary tool for personal training, but they cannot in any way replace an adequate specific instruction, both theoretical and operational.

The information provided in the propeller manuals contain procedures and checks that can be carried out by qualified professionals operating in the sector under normal operating conditions.

The information relating to the propeller can be found in the following documents.

- Installation, use and maintenance manual: contains the information necessary for installation, use and scheduled maintenance of the propeller. It also contains the list of spare parts available.
- Overhaul manual: contains the information necessary to perform a complete overhaul of the propeller following the achievement of the maximum hours of use (TBO) or serious damage.
- Service Letter: Contains information aimed at improving the product or its use .
- Service Bulletin: reports the replacements, checks or warnings to be applied by the indicated deadline.

- Alert Bulletin: reports the replacements, checks or warnings to be applied compulsorily before the next flight.

A

Frequent technical modifications and the variety of installations may make the information contained in the aforementioned manuals inapplicable, inadequate or insufficient.

The illustrations in this manual do not represent the details of the product in detail, but provide an indication of their function and structure: for this reason, it is not possible to obtain dimensional information or verify details from the published illustrations.

All further documentation that may be required is available at MWfly authorized service centre.

4. DESCRIPTION

The propellers of the HydroPitch family consist of a hydraulically variable pitch hub and blades made of fibreglass and carbon, with reinforcement on the leading edge in stainless steel. The insertion of the blade into the hub bushing takes place by means of a geometric screw coupling and gluing. The increase in the pitch of the blades is achieved by increasing the pressure of the control oil inside the hub; the decrease in pitch is obtained by decreasing the operating pressure of the control oil and thanks to the return action exerted by two concentric springs placed inside the hub. The pitch variation mechanism is lubricated with grease, which must periodically be reapplied to the moving parts, where applicable.
The propellers are available in 2 or 3 blade execution, pulling or pushing, with right or left rotation; the direction of rotation is defined in paragraph 4.2.2.
In the figures and in the following chapters a 3-blade driving propeller will be depicted and considered as an example, with left rotation: the information for the other types of propellers will therefore be extrapolated with the necessary variations in quantity and direction.

4.1. Intended Use

The HydroPitch variable pitch propellers have been designed to equip ULM, Experimental or LSA category aircraft, with two or three axles, or with rotary wing, preferably in combination with MWfly engines of the SPIRT series.
The use of the propellers is intended for recreational purposes only, in installations where a sudden failure of the pitch control system does not affect safety.

⚠ **For safe use of the propeller, in addition to the operating limits, it is also necessary to comply with the maintenance deadlines set out in the scheduled maintenance program.**

In no way can the guarantee and safety specifications be extended to uses other than those mentioned above. MWfly declines any responsibility for damages or injuries caused to people or things deriving from failures or blockages of the pitch control system.
Improper use of the propeller causes immediate revocation of the warranty and frees MWfly from any further obligation towards the user.

The propeller can be used within and not beyond the time limits imposed by the TBO: after this deadline it is necessary to have the propeller completely overhauled at an authorized service centre.

4.2. General Characteristics

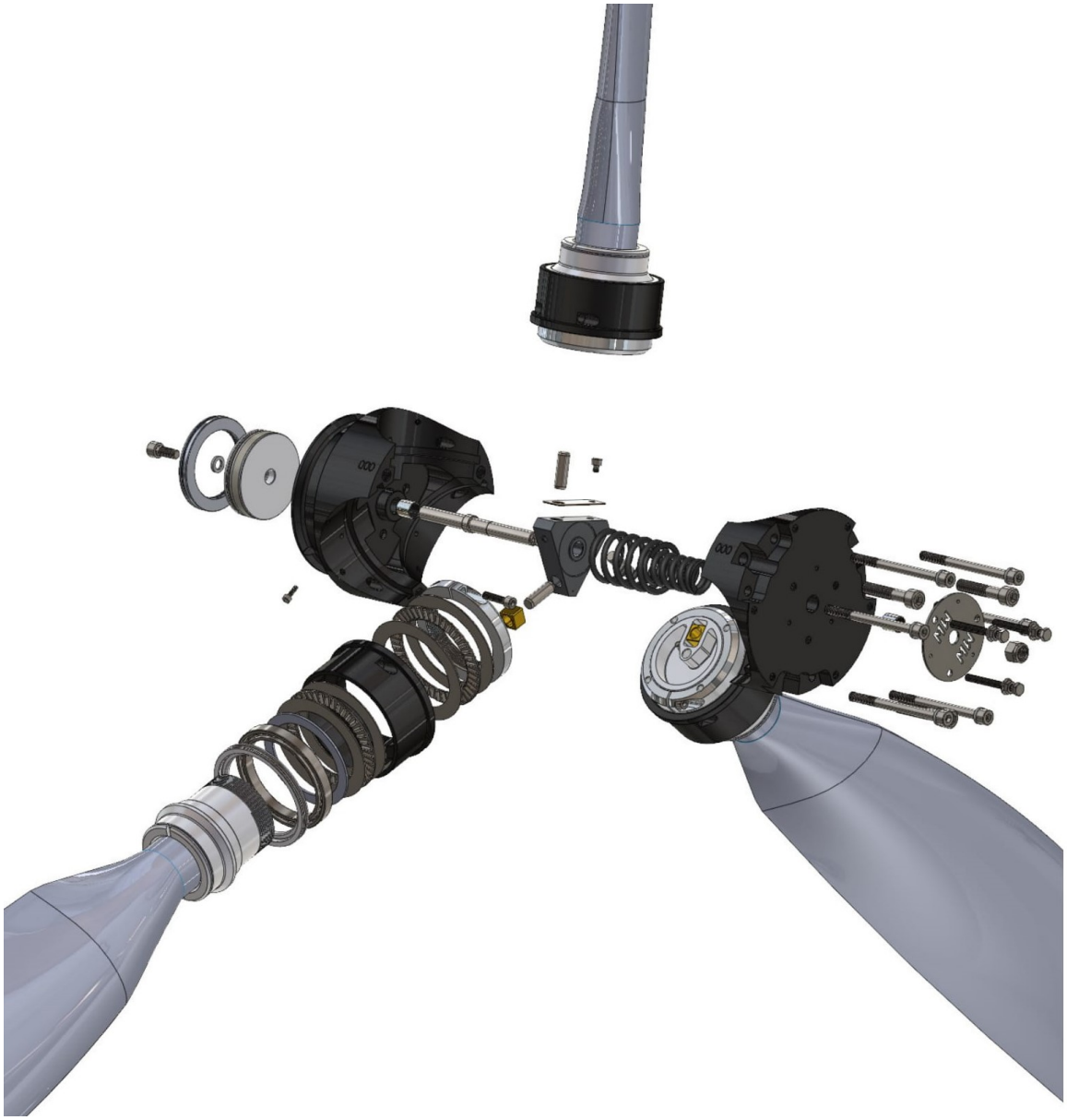

4.2.1.P

Minimum operating pressure [bar]	2.7
Maximum operating pressure [bar]	5.7
Maximum piston stroke [mm]	11
*Maximum blade pitch variation [deg]**	31
*Minium settable pitch [deg]**	10
*Maximum settable pitch [deg]**	41
*Maximum blades tracking error [mm]***	±1.6
*Maximum pitch error between blades [deg]***	±0.8
Maximum static imbalance [g]	3
Maximum dynamic safety unbalance	0,15 IPS
Maximum dynamic unbalance of comfort	0,07 IPS

** measured at 75% of the radius*
** measured at minimum pitch*

4.2.1.C

4.2.1. Fixing Hole

The hub can be mounted on type ARP 502 or Rotax type flanges. The hub drilling pattern is shown in the following figure.

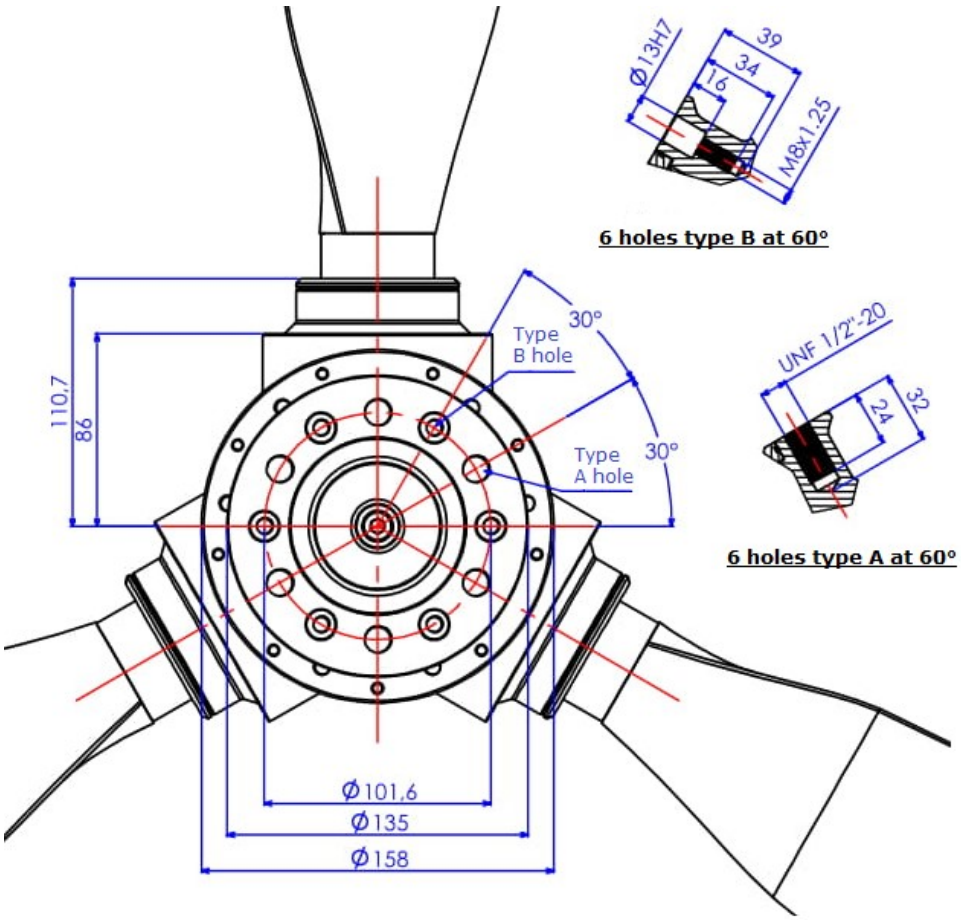

4.2.2.P

The standard mounting is the ARP502 type, for which the centring adapter is also supplied with the flange with a 2¼" hole (as shown in the previous figure), the six screws and the two ½" fixing pins.
In the case of Rotax type mounting, screws and fixing bolts are not provided, and neither is the centring adapter: the latter can easily be made using the one supplied as an example.

4.2.2. Rotation Direction

The direction of rotation of each version of propeller is defined with respect to an observer located in front of the propeller, who sees the engine behind it, according to the SAE J824 standard: therefore a propeller that moves in a clockwise direction it rotates to the right (propeller "R" right), a propeller that moves in an anticlockwise direction rotates to the left (propeller "L" left).
For greater clarity refer to the following figures.

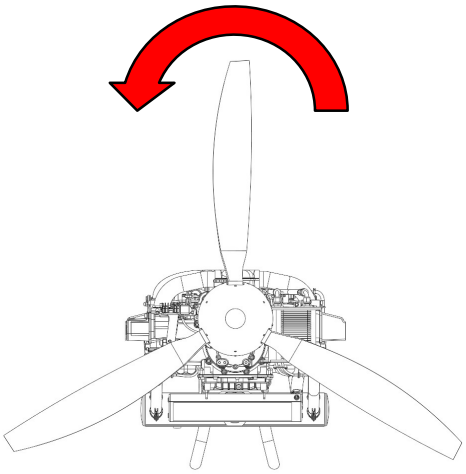

61-06-P

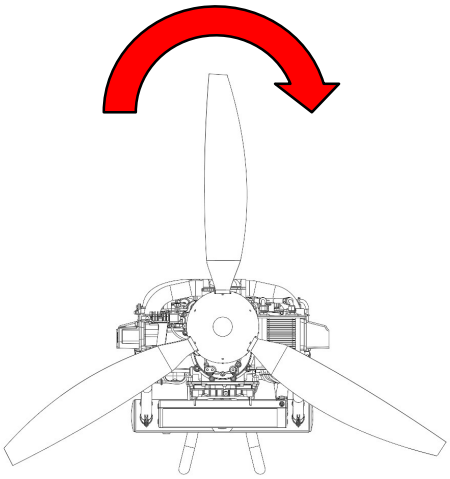

61-07-P

Counter clockwise rotation = left propeller (L) *Clockwise rotation = right propeller (R)*

4.3. Available Version

Model	*No. of Blades*	*Direction*	*Rotation*	*Type*	*D [mm]*	*Max rpm [rpm]*	*Max power [CV]*	*Moment of inertia [Kgcm²]*	*Wt. [Kg]*
HP2 TLS	2	pulling	left	slow		2400	114	3800	
HP2 TRS		pulling	right	slow	1850				9.2
HP2 TLM		pulling	left	medium	1800				9
HP2 TRM		pulling	right	medium	1775				9
HP2 PLS		pushing	left	slow	1850				9.2
HP2 PRS		pushing	right	slow	2100				
HP2 PLF		pushing	left	fast	1775				9
HP2 PRM		pushing	right	medium	1800				9
HP3 TLS	3	Pulling	left	slow	2100		171	5600	
HP3 TRS		Pulling	right	slow	1850				11
HP3 TLM		Pulling	left	medium	1800				10.7
HP3 TRF		Pulling	right	fast	1775				10.7
HP3 PLS		pushing	left	slow	1850				11
HP3 PRS		pushing	right	slow	2100				
HP3 PLF		pushing	left	fast	1775				10.7
HP3 PRM		pushing	right	medium	1800				10.7
HPS PRF		pushing	right	fast	1850				11

4.3.1.C

4.4. Control System

The propellers of the HydroPitch family can be controlled by manual (closed circuit) or automatic (open circuit) systems.

4.4.1. Closed Circuit System

In closed-circuit systems, the pitch variation is obtained by acting on a screw pump. The screw pump can be adjusted manually or electrically. In any case, this pump is able to increase or decrease the amount of oil inside the hub, resulting in a change in pitch.

Closed circuit systems after installation need to be completely purged of air (5.5).

4.4.2. Open Circuit System

In open circuit systems, the pitch variation takes place thanks to the adjustment of a slide valve, which intercepts the hydraulic control circuit, varying its pressure: the movement of the valve is regulated in such a way that the consequent pitch variation maintains constant the engine revolutions as the power imposed by the pilot or required by flight conditions varies.
In the case of using a HydroPitch propeller in combination with a MWfly engine, the pitch variation takes place via an open-circuit electro-hydraulic control system, consisting of a controller for setting the desired rpm or flight condition, and by a step-by-step electric actuator, which changes the position of the slide valve. For more details, refer to the control system user manual.

5. INSTALLATION

5.1. Shipping Conditions

The propellers are shipped partially disassembled: the hub is closed with all the screws necessary for correct assembly; the blades are glued, statically balanced and mounted inside the rotation bushings, ready for use.

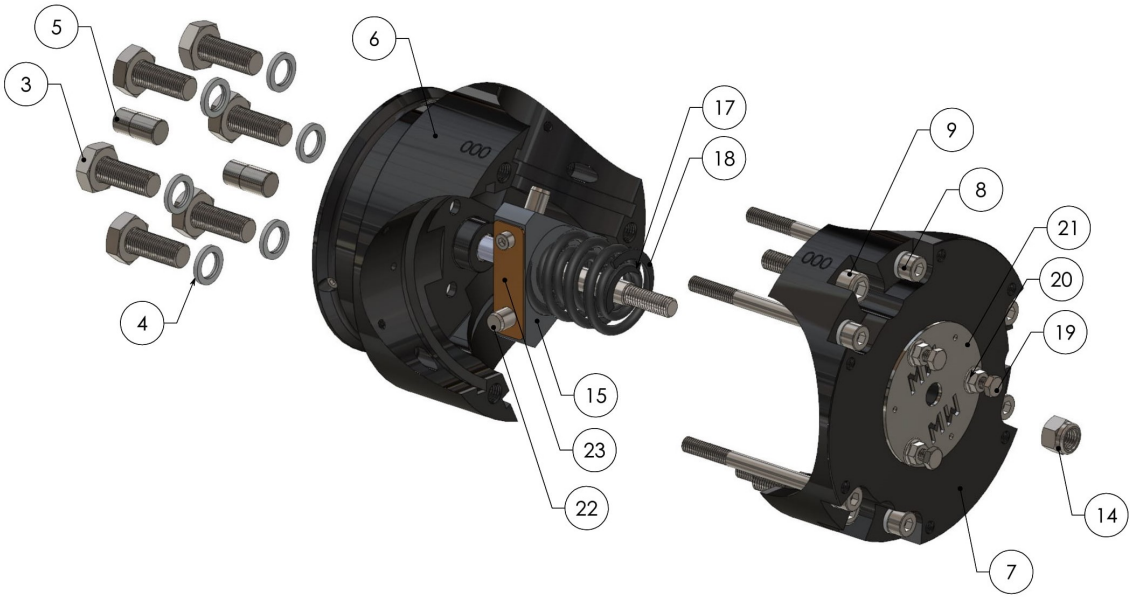

5.1.1.P

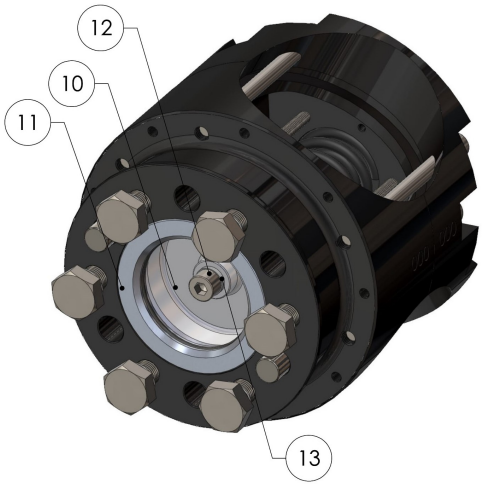

5.1.2.P

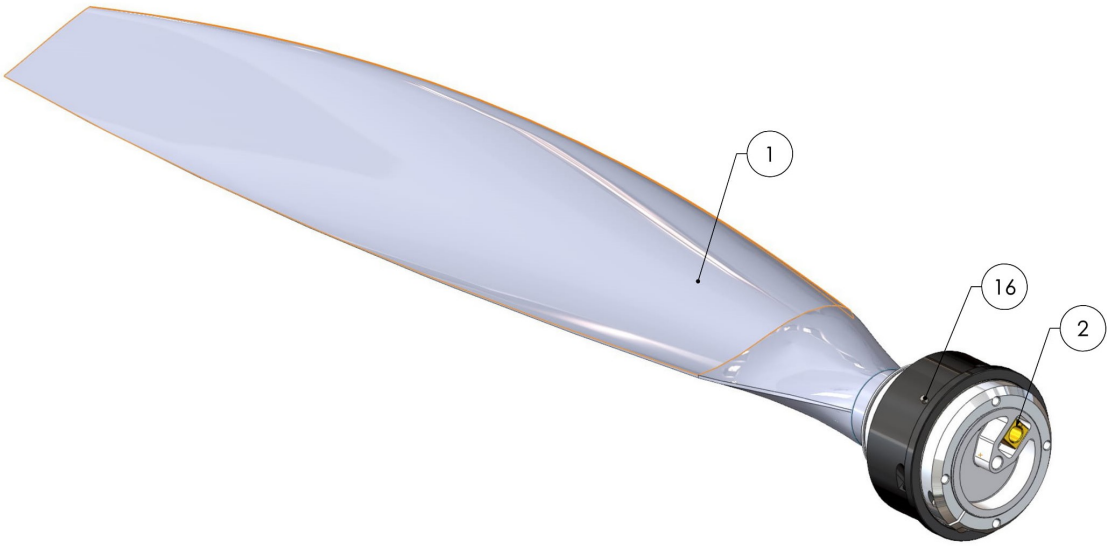

5.1.3.P

All the material is pre-greased. Each blade is marked at the base by a number, also referred to inside the rear part of the hub, in such a way as to uniquely report its position: during assembly, be careful to position each blade in its respective position.
Upon receipt of the package, after having checked its contents according to table 5.1.1.C, assembly must be carried out, as specified in the following chapters.

Content Check			
	Description	**Quantity ***	**Note**
1	Blades	(2) 3	assembled
2	blade control pad	(2) 3	do not remove from the blade
3	1/2” flange hub mounting screw	6	unscrew from the hub
4	Safety washer ½"	6	
5	Mounting pin ½"	2	Remove for the hub
6	Hub rear part	1	assembled
7	Hub front part	1	assembled
8	Blade union screw M8 L100	(4) 6	unscrew from the hub
9	Hub union screw M10 L50 and washer	(2) 3	unscrew from the hub
10	Control piston	1	do not extract from the hub
11	Flange adapter	1	do not extract from the hub
12	Rod clamping screw	1	unscrew from the rod
13	M8 lock washer	(5) 7	
14	M10 nut for minimum pitch adjustment	1	unscrew from the rod
15	Cam and control rod	1	do not disassemble
16	D4 pin for blade positioning	(2) 3	do not extract
17	Small spring	1	to remove
18	Large spring	1	to remove
19	M6 screw for maximum pitch adjustment	(2) 3	do not disassemble
20	M6 nut for adjusting screw	(2) 3	do not disassemble
21	Rod stop plate	1	do not disassemble
22	Blade drive pin	(2) 3	do not disassemble
23	Cam support pad	1	do not disassemble

** tra parentesi () quantità per versione bipala*

5.1.1.C

5.2. Assembly

The assembly of the propeller must be done by carefully following the procedure described below. All the figures refer to the assembly of a propeller type HP3L / T: the indications for the assembly of the other types of propeller must be taken from these figures, with the necessary variations in quantity or direction.

Necessary material

1. Allen key 6mm
2. Allen key 8mm
3. Bi-hex socket wrench 17mm
4. Torque wrench 0-50Nm
5. Bearing grease (7.5.9.)

a. Disassemble the parts as specified in table 5.1.1.C.

b. lay the rear part of the hub on a surface.

c. Check the presence of the pins for positioning the blades (# 16) and the control pad (# 2) inside their seat.

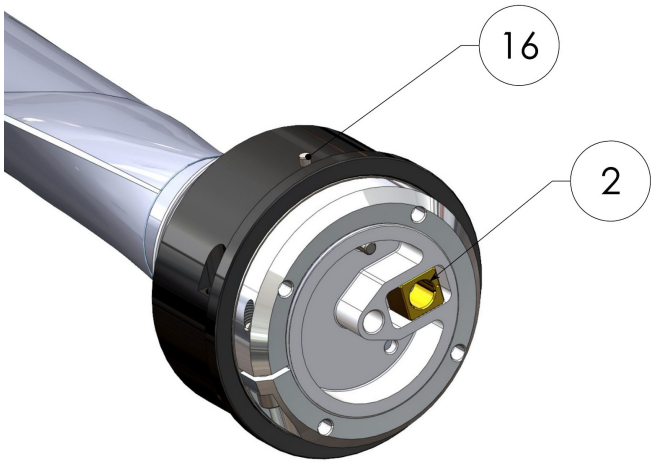

5.2.1.P

d. Rotate each of the blades inside the respective bush, so that the hole of the reference pin on the bush is inclined by about 45 ° backwards with respect to the rear part of the blade.

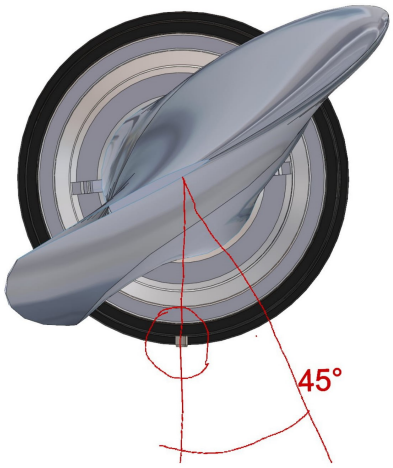

5.2.2.P

If rotation is difficult, help yourself by inserting the key [1] into one of the two fixing holes on the bushing.

e. Pull the blade control rod forward as far as it will go and rotate it so that the cam surface equipped with the bronze pad is aligned with position 1 of the hub.

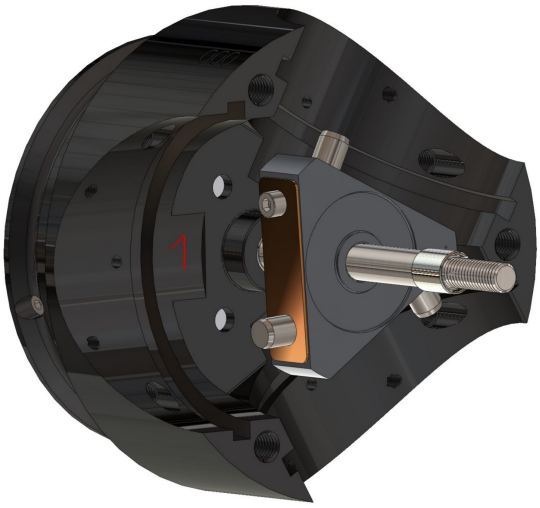

5.2.3.P

f. Remove the control pads from the blades and insert them on the respective pins on the control cam inside the hub: each pad is numbered on the upper face and must be correctly positioned inside the hub; also check that each

pad has the reference positioned towards the outside. It is important that, at the first assembly, the reference is positioned in the same way in all the blades.

g. Bring blade # 1 to position # 1 on the hub; insert the blade on the control pad, making sure that the reference mark remains towards the outside.

h. Place the boss of the blade bushing inside the respective seat on the hub. The insertion in this first phase does not have to be complete.

5.2.4.P

i. Repeat points **g** and **h** for the remaining blades as well, taking care to respect the numbering.

j. Press the blade downwards by grasping it with one hand on the composite part of the foot and at the same time rotating the bush with the help of a wrench inserted in one of the holes, in such a way as to align the positioning pin with the respective hole on the bush itself, up to feel a small click.

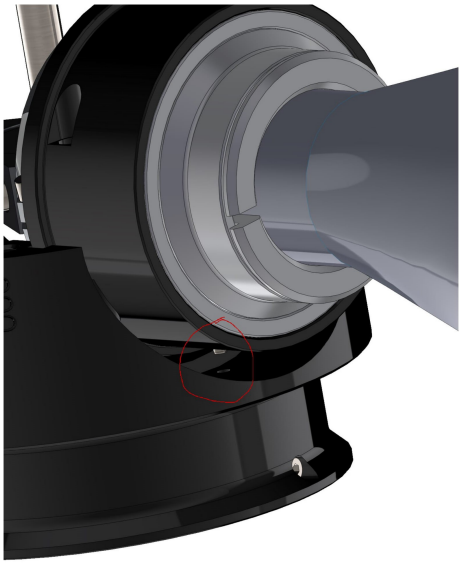

5.2.5.P

This operation must be done gradually on each of the blades, adapting the position of the others to each step of introduction of a blade. The introduction of the pins into the hub seats will be complete when each of the blades is aligned correctly.

k. Push the control rod downwards, also acting on the blades if necessary: during this operation, be careful not to move the blade bushings from the correct position in the hub.

l. If necessary, reapply a certain amount of grease on the moving parts [5]. Clean any excess grease on the blade bushings.

m. Insert the spring #18 on the control rod; spring #17 may not be present: if necessary, it must be used in combination with spring #18 or alone, following the prescription of MWfly.

n. Insert the M8 blade tightening screws in the upper part of the hub, interposing the safety washers.

o. Approach the upper part to the lower part of the hub, in such a way as to match the position of the numbers on the side of the parts and to insert the blade tightening screws in the seat on the bushings.

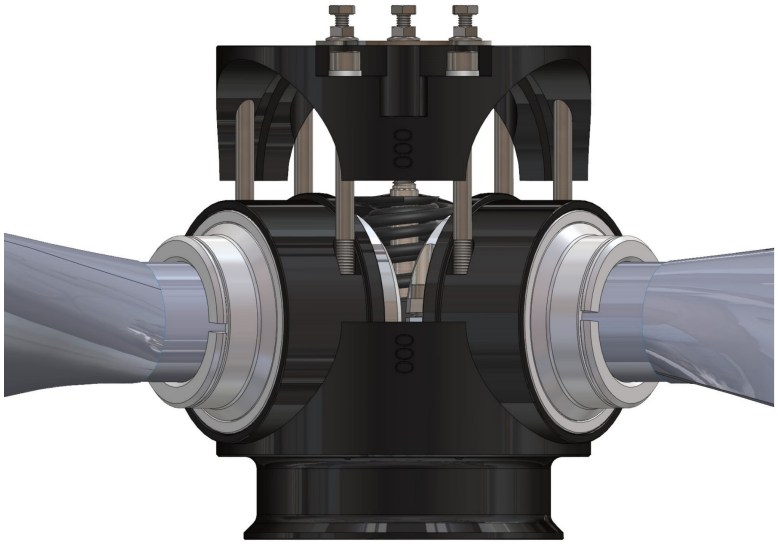

5.2.6.P

p. Push firmly on the upper part of the hub and gradually tighten [1] the clamping screws of the bushings. It is important to avoid that the control piston, pushed by the control rod, comes out of its seat in the rear part of the hub: for this reason, keep the hub firmly resting on the surface and, at the same time as tightening the blade union screws, screw [3] also the nut for adjusting the minimum pitch, in such a way as to gradually compress the spring.

q. Also insert the M10 hub union screws in their seats and screw them [2], interposing the washers provided.

r. Working gradually on the M10 screws, on the M8 screws and on the pitch adjustment nut, bring the upper part of the hub against the lower part.

s. Tighten [1+4] three M8 screws at 22Nm set at 120°; move to the M8 screw placed at 180° from the last tightening and tighten the other three M8 screws placed at 120°; finally tighten [2+4] the M10 screws to 42Nm.

t. Screw [3] the minimum pitch adjustment nut until an incidence of about 16° is obtained on the blades, measured according to the procedure described in paragraph 5.4.3: this value is to be considered a good starting point for subsequent adjustments.

u. Turn the propeller over and tighten [1 + 4] the rod clamping screw, which joins the piston to the rod itself: check that the safety washer is present under the head of the screw. The tightening torque is 25Nm.

5.3. Mounting on the Engine Flange

5.3.1. Precaution

Before proceeding with the assembly of the propeller on the aircraft, it is necessary to make sure that none of the rotating parts can interfere with parts of the canopy or the aircraft. This check must also be performed considering the overall dimensions of the blades at maximum incidence: use the indications in the following figure for this purpose.

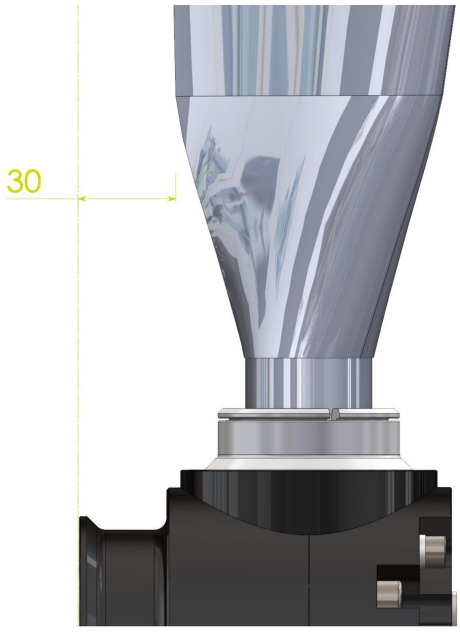

5.3.1.P

5.3.2. Spacer

For the best results it is advisable not to apply any spacer between the engine and the propeller, appropriately designing the canopy: as the distance of the plane of rotation of the blades from the centre of gravity of the engine, increases all the inertial stresses due to vibrations and manoeuvres of flight, consequently decreasing the comfort on board. However, if the situation makes it indispensable, it is possible to interpose a spacer between the propeller and the engine flange, with a maximum length of 80mm.

The creation of the spacer is the responsibility of the installer. The drawing provided is to be considered an example, but in no way constitutes a constraint or design indication.

Propellers installed with greater overhang than specified above are not considered suitable for flight, and therefore will not be covered by any warranty.

The presence of the propeller spacer and the value of its length must be noted in the propeller logbook.

It is advisable to make a small diameter oil passage hole inside the spacer: this measure serves to decrease the oil content inside the spacer. Otherwise, the oil contained in the hydraulic variable pitch propeller system may not be sufficient to ensure proper propeller operation.

5.3.3. Instruction

The propeller must be mounted on the engine propeller flange in accordance with the following procedure.

Necessary material

1. Open end wrench ¾”
2. Allen key 6mm
3. Torque wrench 0-50Nm
4. Bearing grease (7.5.9.)

a. Place the aircraft on a level surface, disconnect the electrical contacts from the battery and, if possible, brake the aircraft.

b. Apply a small amount of grease [4] on the surface of the sealing ring inside the mounting adapter.

c. If the propeller is mounted on an MWfly engine, remove [2] the screw and the sealing washer of the oil passage hole inside the propeller shaft.

d. Carefully check the two mounting surfaces on the propeller hub and engine propeller flange: they must be perfectly clean and free of defects.

e. Prepare one of the six tightening screws near the engine propeller flange; the safety washer must also be inserted into the screw.

f. Identify the two holes provided for the drive pins on the motor flange, using figure 5.3.2.P.

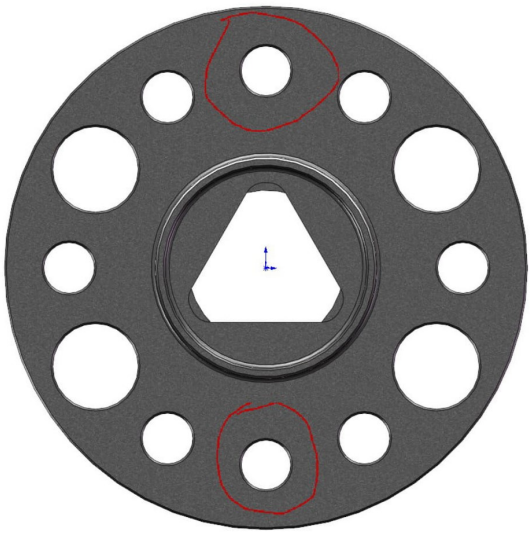

5.3.2.P

g. Grasp the propeller with two hands and bring it close to the engine propeller flange, keeping the bearing surface of the hub parallel to the flange plane on the engine as much as possible and trying to align the drive pins with the holes provided on the flange. In the case of three-blade propellers, it is convenient to grasp the two upper blades, keeping the third blade as vertical as possible and directed towards the ground, taking care to align the drive pins with the holes provided on the flange.

h. Push the propeller towards the flange, moving it slightly in order to facilitate the insertion of the sealing ring on the centring hub of the flange. The insertion must take place smoothly: otherwise it is possible to damage the sealing ring during insertion, which may need to be replaced.

i. Once the propeller has been inserted on the flange and verified the correct insertion of the drive pins, keep the propeller firmly in position with one hand by acting on the centre of the hub; with the other screw the previously prepared tightening screw until the propeller is secured to the flange.

j. Prepare with the lock washers and screw [1] the other five screws.

k. Tighten [1 + 3] the fixing screws with a crossed pattern to 35Nm.

The supplied screws are to be considered suitable for mounting on MWfly engine only. For other engines, the manufacturer's instructions must be observed.

If M8 screws are used for fastening instead of the supplied screws, tighten to 25Nm, and use only class 8.8 steel screws (not stainless steel). In any case, interpose the safety washers between the screws and the clamping surface: alternatively, use a medium-strength thread locking compound. The ½" mounting pins (# 5) must first be removed from the hub.

If ½" screws are used, the thread portion engaged inside the hub must not be less than 16mm: this must be considered in the case of mounting with spacers or on engine other than MWfly.

If M8 screws are used, the thread portion engaged inside the hub must not be less than 28mm, of which 12mm engaged in the thread and 16mm engaged in the counterbore housing the drive bushings. This must be considered in the case of mounting with spacers or on an engine other than MWfly.

Do not tighten the screws to a higher torque than the prescribed one to avoid deformation of the same or damage to the threads.

After the first hour of operation and at the prescribed intervals, it is necessary to check and restore the correct tightening torque of the hub. If frequent re-tightening is necessary, it is essential to re-perform dynamic balancing on the propeller.

5.4. Controls and Adjustments

After having assembled and mounted the propeller on the aircraft, it is necessary to carry out the checks and adjustments described below.

5.4.1. Blades Tracking

All the propellers are built in order to respect the range provided for the tracking of the blades, shown in table 4.2.1.C: this check is necessary to verify if the blades have been mounted correctly in the hub and it is important to improve flight comfort and reduce vibrations on the mechanical parts of the aircraft and the propeller itself.

Necessary material

1. Wrench for spark plug
2. Caliper
3. Pencil
4. Wooden block

Control

a. Place the aircraft on a horizontal plane and, if possible, brake it.

b. Remove [1] a sparkplug from each cylinder, to facilitate the rotation of the propeller and prevent accidental starting.

c. Rotate the propeller until a blade is positioned vertically downwards.

d. Place the wooden block [4] on the ground, near the end of the lower blade; the wooden block must have a thickness slightly less than the distance from the ground of the lower blade: this to allow easy tracking of the position.

e. Bringing the pencil [3] to the back of the blade in a stable manner, mark the trajectory of the pencil on the wooden block by moving it from the leading edge to the trailing edge, without moving it away from the surface.

5.4.1.P

f. Carry out the same operation on the remaining blades, perhaps marking the trajectory with different coloured pencils in such a way as to attribute the respective trajectory to each blade.

Obviously, during these markings it is necessary to make sure that the wooden block cannot move, in order not to distort the measurement.

g. Using the calliper [2], measure the distance between the line drawn in the most advanced position and the one in the rearmost position: the value of this measurement must be compatible with what is reported in table 4.2.1.C.

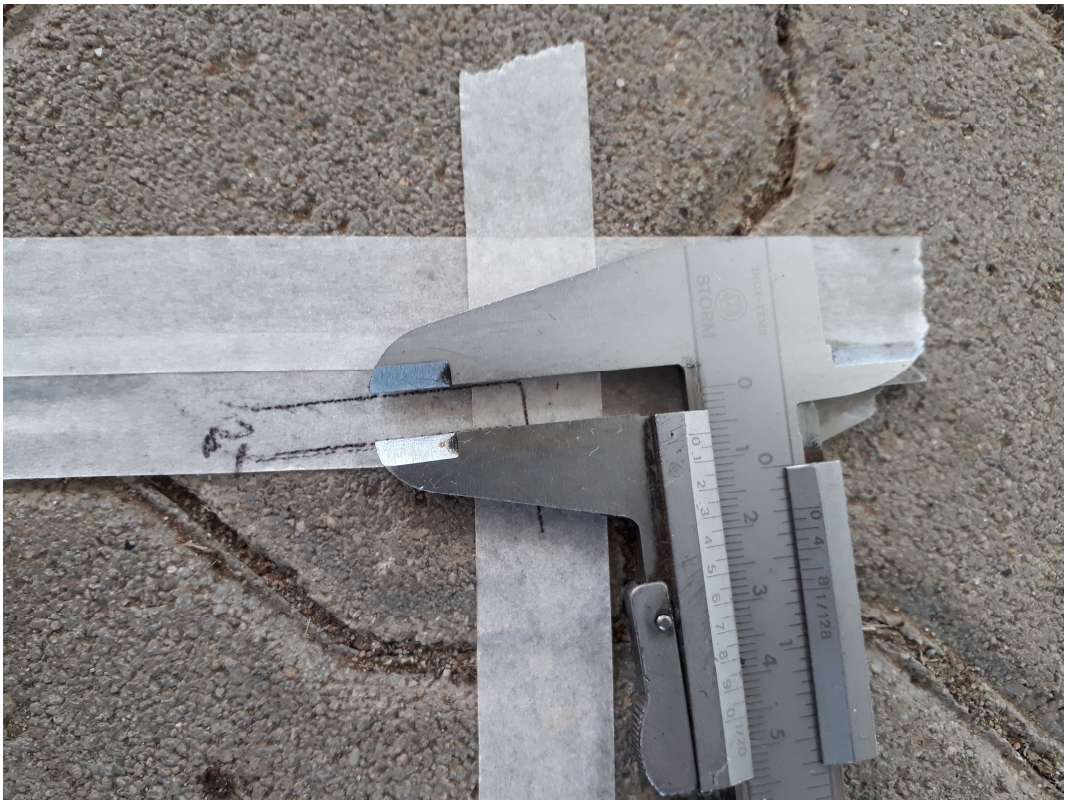

5.4.2.P

h. Record the tracking value of each blade in the propeller logbook.

Adjustment

In the event that the measurement made in the previous point g is not compliant, it is necessary to remove the propeller from the engine flange and check the flatness

of the flange and the perfect cleaning of the flange and hub joining surfaces; if the tracking is still out of range it is necessary to disassemble the blades from the hub and repeat the assembly, taking care to clean all the coupling surfaces and tighten the union screws correctly.

5.4.2. Pitch Error

All propellers are checked before shipment so that the pitch error falls within the range specified in table 4.2.1.C: the correct mounting position of the drag pad of each blade is marked on the respective blade (as indicated below).
However, if the keying of the blades on the hub is not compliant, it is possible to adjust them, as described below.

Necessary material

1. Digital inclinometer
2. flexible meter
3. masking tape

Control

a. Place the aircraft on a horizontal plane and, if possible, brake it.

b. Remove [1] a sparkplug from each cylinder, to facilitate the rotation of the propeller and prevent accidental starting.

c. On the back of each blade apply a strip of adhesive tape 200mm from the end.

d. Reset the inclinometer [1] by placing it on the front plane of the propeller hub.

e. Rotate the propeller until a blade is positioned horizontally: to do this, place the inclinometer [1] on the trailing edge of the blade.

f. Measure [2] the distance from the ground of the trailing edge of the blade, noting the value on the adhesive tape applied to the blade.

g. Approach the inclinometer [1] to the back of the blade, remaining adjacent to the adhesive tape in the direction of the tip of the blade.

h. Read the value on the inclinometer and note it on the adhesive tape applied to the measured blade.

i. Repeat the operations from **e** to **h** for the other blades.

j. Check that the deviation between the blade with maximum pitch and the one with minimum pitch complies with table 4.3.1.C.

Adjustment

If the error is greater than the admissible one (4.2.1.C), it is necessary to adjust the pitch of each blade by acting as described below.

a. Remove the propeller from the engine propeller flange (7.5.4.).

b. Disassemble the propeller hub, taking care not to damage the blades (7.5.5.).

c. Check the position of the control pad of each of the blades: on the pad there is a marking point, which must coincide with the marking point on the foot of the blade itself.

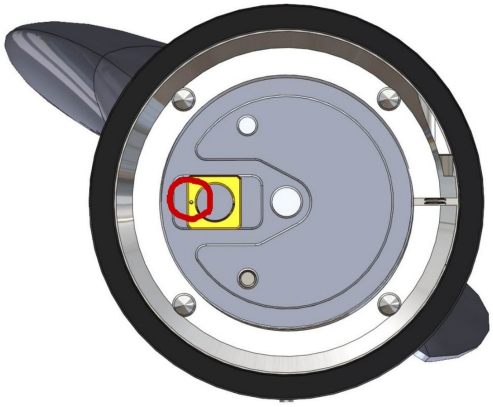

5.4.3.P

d. Reposition the control pad of each blade considering the indications in the following drawing.

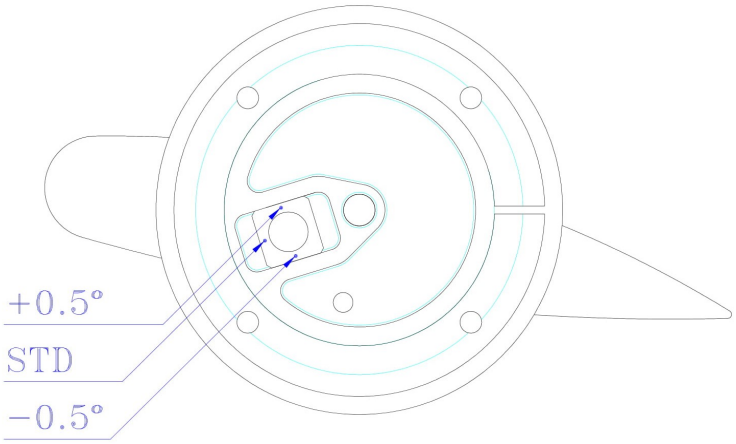

5.4.4.P

The rotation of the pad of each blade must be managed in such a way as to minimize the pitch error:

- in right-hand rotation pulling propellers, the clockwise rotation of the pad produces an increase in pitch of about 0.8°, the counter clockwise rotation of the pad produces a decrease in pitch of 0.8°;
- in the pulling propellers with left rotation, the clockwise rotation of the pad produces a decrease in pitch of 0.8°, the anticlockwise rotation of the pad produces an increase in pitch of 0.8°.
- The condition of the pushing propellers is reversed compared to the condition of the pulling propellers.

e. Note the position of the control pad of each blade in the propeller book.

f. Reassemble the propeller according to the instructions in chapter 5.2.

g. Reassemble the propeller on the engine according to the instructions in chapter 5.3.

h. Check again the step error according to the above procedure.

5.4.3. Minimum Pitch Setting

A

The minimum pitch must necessarily be set and checked before performing the first flight, as it represents a safety condition in the event that the regulation system failure.

Necessary material

1. Digital inclinometer
2. Flexible meter
3. Bi-hex socket wrench 17mm

Control

a. Place the aircraft on a horizontal plane and, if possible, brake it.

b. Reset the inclinometer [1] by placing it on the front plane of the propeller hub.

c. Rotate the propeller until a blade is positioned horizontally: to do this, place the inclinometer [1] on the trailing edge of the blade.

d. Remaining 200mm [2] from the tip of the blade, approach the inclinometer [1] to the belly of the blade

e. Read the value on the inclinometer and write it down.

Adjustment

The adjustment is necessary if the value measured in the previous point **e** deviated by ± 1° from the value of 16°. This value is to be considered as a precaution in

order to be able to carry out the verification test safely, without reaching the maximum engine speed.

a. Perform the subtraction between 16° and the degree value read on the inclinometer [1]: if the resulting value is positive, the minimum pitch must be increased by screwing the adjustment nut clockwise; if the resulting value is negative, it will be necessary to decrease the minimum pitch by unscrewing the adjustment nut counter clockwise.

b. With the wrench [3] act on the minimum pitch adjustment nut by rotating it by a number of revolutions or fractions of a revolution such as to produce the desired pitch variation. To do this, consider that each complete turn of the nut produces a pitch variation of approximately 4°.

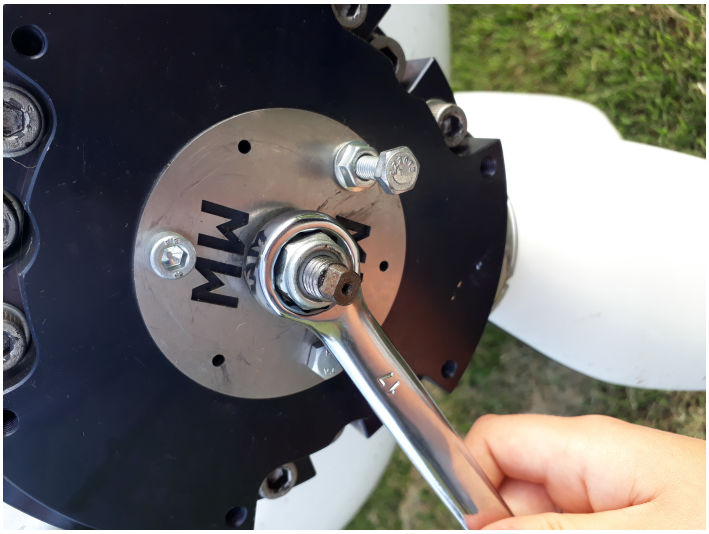

5.4.5.P

c. Check again the blades minimum pitch.

Test

A correct setting of the minimum pitch is that which allows the engine to reach a speed between 300 and 100 rpm less than the maximum set by the engine manufacturer without the intervention of the hydraulic regulator. To verify, proceed as follows.

a. Tie the aircraft to a fixed point.

b. Turn on the engine and warm up.

c. On the governor control unit, set a number of revolutions approximately 1000 higher than the maximum speed foreseen for the motor.

This is to prevent the intervention of the hydraulic regulator from distorting the evaluation of the minimum pitch setting performed.

d. Gradually increase the position of the accelerator lever and at the same time check that the rpm reached are lower than the maximum value allowed by the engine manufacturer for the take-off condition.

e. Reach the end of the lever stroke, and note the rpm value reached.

If the maximum permissible revs value is reached before reaching the lever end stroke, do not continue with the test before having increased the minimum pitch value.

f. The revs value reached must be between 300 and 100 revolutions less than the maximum ones expected at take-off by the engine manufacturer, and in any case lower than the maximum revolutions expected for the propeller, as per table 4.4.1.C.

g. If the value deviates from this range, it is necessary to adjust the minimum pitch according to the procedure described above, and repeat the verification test.

h. Note the minimum pitch angle value in the propeller logbook.

5.4.4. Maximum Pitch Setting

The maximum pitch must necessarily be set and checked before performing the first flight, as it represents a safety condition in the event that the propeller, for various reasons, remains drawn at the maximum pitch.

The maximum pitch is factory set at a precautionary value of about 25° which normally allows you to reach speeds of the order of 230Km/h at about 2400 propeller revolutions.

Necessary material

1. Digital inclinometer
2. Flexible meter
3. Closed wrench 10mm
4. Open wrench 10mm

5. Caliper

Control

a. Place the aircraft on a horizontal plane and, if possible, brake it.

b. Reset the inclinometer [1] by placing it on the front plane of the propeller hub.

c. Rotate the propeller until a blade is positioned horizontally: to do this, place the inclinometer [1] on the trailing edge of the blade.

d. Get help from a second person, and act simultaneously on two blades to increase the pitch up to the stop.

e. Without moving from the position reached, place the inclinometer [1] at about 200mm [2] from the end of the blade, and measure the pitch angle.

f. Note the value.

Adjustment

Adjustment is necessary if the value measured in the previous point does not conform to achieving the desired speed or flight performance, as described in the verification test.

If in doubt, avoid setting the maximum pitch values that are too high, which could be dangerous in case of failure of the variable pitch system.

a. Engage the wrench [3] on the head of one of the maximum pitch adjustment screws and with the wrench [4] loosen the respective lock nut.

5.4.6.P

b. Unscrew [3] the adjustment screw to increase the maximum pitch or screw it to decrease the maximum pitch; for this purpose, consider that each complete turn of the screw allows you to increase or decrease the keying of the blade by about 3 °.

c. Retighten [4] the locking nut while keeping the adjustment screw in position [3].

d. Measure [5] the height of the head of the screw just adjusted from the base, and note the value.

5.4.7.P

e. Adjust the remaining screws to the same value.

f. Check the maximum pitch value set according to the procedure described above.

Test

A correct setting of the maximum pitch is that which allows the engine to reach the maximum cruising revolutions specified by the engine manufacturer within the maximum flight speed specified by the aircraft manufacturer. Alternatively, the adjustment can be carried out in such a way as to have an even greater pitch value, which allows the desired cruising speed to be obtained at an rpm considered to be of comfort.

The determination of the rpm and load conditions (throttle position) of the engine must in any case be made in compliance with the prescriptions of the aircraft manufacturer.

a. Carry out the post-installation tests described in chapter 5.6.

b. In level flight and no wind, set the maximum cruising rpm or the desired rpm to reach the maximum speed of the aircraft.

c. Keep the condition for at least 1 minute, while checking that the adjustment system does not allow the engine to run at speeds higher than the set one.

d. If the engine speed is higher than the one set, the maximum pitch value must be increased, acting as previously described.

e. Write down the maximum pitch angle value in the propeller logbook.

5.5. System Vent

This operation is generally not necessary in open circuit systems (with mechanical or electronic governor). It is instead indispensable in closed-circuit systems.

Necessary material

1. Allen key 3mm
2. Torque wrench 0-50Nm
3. Weak threadlocker

a. Start the engine at intermediate speeds, and vary the propeller pitch repeatedly.

b. Turn off the engine and wait for it to cool down.

c. Make sure that the master relay is in the off position.

d. Rotate the propeller by hand in such a way as to position the vent screw in the upper position.

e. Remove [1] the vent screw.

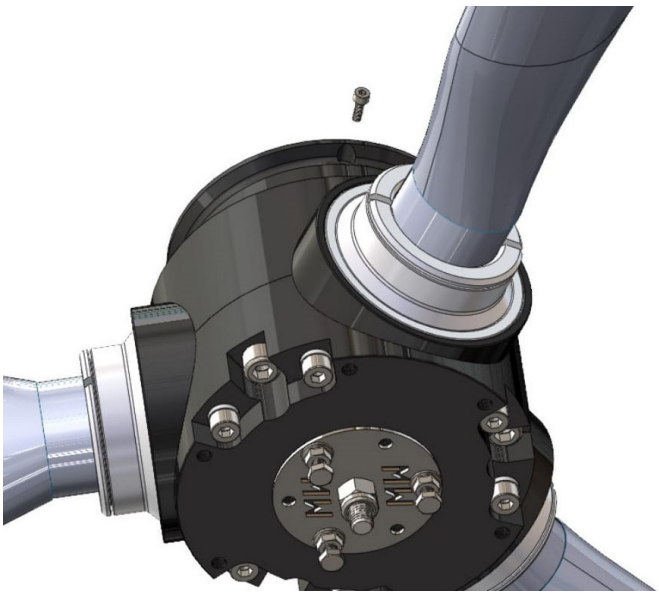

5.5.1.P

f. In the case of closed-circuit systems, operate the pump until you see oil is leaking from the breather hole.

g. Retighten [1 + 2] the bleed screw, tightening to 4Nm and applying thread lock [3].

h. Restart the engine and repeat operations from **d** to **g** until no more air escapes.

5.6. Installing the Spinner

The spinner is not included in the propeller supply.
The following figures highlight the useful points for fixing any support flanges of the spinner, as well as the dimensions of the hub itself: there are fixing holes both on the front of the hub and on the rear.

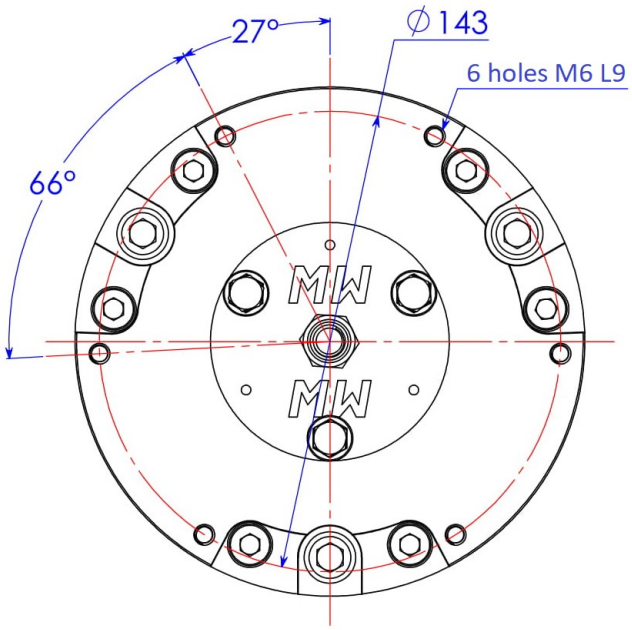

5.6.1.P

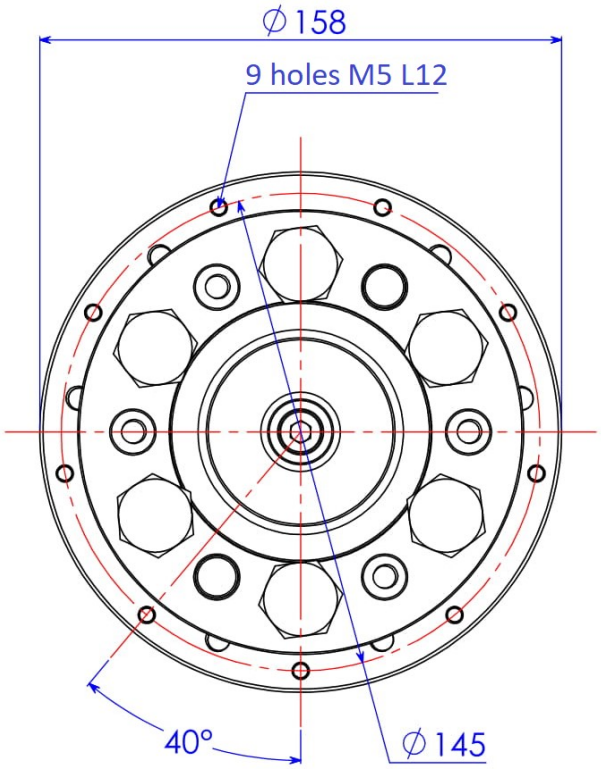

5.6.2.P

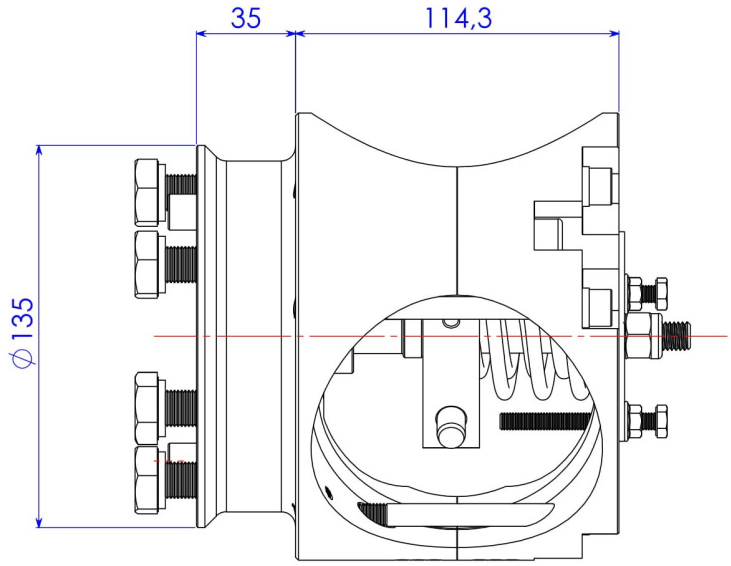

5.6.3.P

As an option, a carbon fibre spinner is available, built in two halves, which can be screwed to the rear surface of the hub using the 9 pre-drilled M5 holes (5.6.2.P).

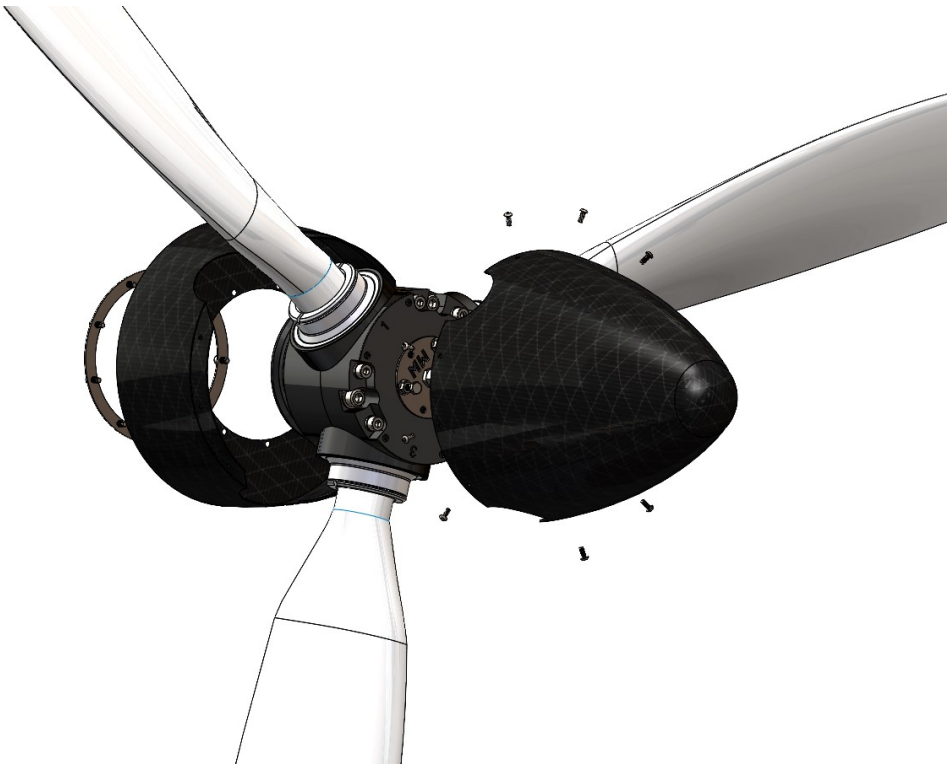

5.6.4.P

Max diameter [mm]	260
Total high [mm]	372
Front overhang from flange surface [mm]	363
Rear overhang from flange surface [mm]	9
Weight [g]	850

5.6.1.C

For installation, follow the steps below.

a. Remove the propeller from the flange.

b. Screw the base of the spinner on the on the hub, taking care to pu it the correct position with respect to the blades

c. Place the retaining ring on the base of the ogive and secure everything using the 9 supplied M5 screws; a threadlocker compound should be applied to the screws.

d. Fit the front part of the ogive on the base, taking care to match the reference marks on the inside of the same.

e. Fasten the two parts of the spinner together using the supplied screws, on which a threadlocker compound has been previously applied.

f. Start the engine and check that the tip of the spinner rotates centred.

It is very important that the spinner is well centred and fixed to the hub to avoid annoying vibration or resonance phenomena due to the precession motion of the tip of the spinner.

g. To centre the tip of the spinner, slightly unscrew the screws joining the base and tighten them again, keeping the spinner itself in the correct position; it is possible to slightly slit the joining holes of the two parts of the spinner to increase the angular excursion of the tip.

h. Check the dynamic balancing of the propeller with the spinner installed at various rotation speeds.

5.7. Installation Test

After completing the installation and before carrying out the first flight, it is necessary to verify the installation itself. The procedure is described below.

i. Rotate the propeller by hand and check that it can rotate freely, also considering the dimensions of the blades at maximum pitch.

j. Tie the aircraft to a fixed point.

k. Turn on the engine and warm up.

l. Set the take-off rpm on the governor and verify that the engine can reach them.

m. In compliance with the engine specifications, try various rpm/load combinations (throttle position) and check that the governor is able to maintain the required condition.

n. Also try conditions that simulate a go-around manoeuvre, and check that the propeller reacts promptly and stably.

o. Turn off the engine and check for oil leaks between the flange and hub. The presence of traces of grease on the part of the blade near the root or near the joining plane of the two parts of the hub is completely normal, and will disappear after the first flights.

p. Check the tightening of the union screws between the flange and the hub.

q. Check the tightening of the union screws of the two parts of the hub, first the M10 screws, and then the M8 screws. Normally no tightening adjustment is necessary.

r. Firmly grasp the end of each blade and check that there is no abnormal play between blade and hub, both in the direction of rotation and in the direction orthogonal to rotation (therefore outside the rotation plane): in normal play conditions there is no you feel any movement or you feel a movement of a few tenths of a millimetre; if necessary, reduce play before flying.

s. Grasp each blade about half of its length and check the play on the pitch variation movement: a slight rotation is permissible. If necessary, restore correct clearance before flying.

5.7.1. Dynamic Balancing

A

Although the propellers are statically balanced at the factory, it is necessary to perform dynamic balancing before flying to avoid potentially dangerous conditions.

After completing the installation of the propeller and the spinner, it is necessary to carry out dynamic balancing of the propeller. It is important to mark the reciprocal position of the hub, spinner and propeller flange, to avoid that, in case of removal of the propeller from the aircraft, the initial position is lost upon subsequent reassembly, and consequently the dynamic balancing must be repeated.

The final dynamic balance value must be less than 0.15 IPS. In any case, avoid values higher than 0.5 IPS, which can cause dangerous vibrations on the components of the aircraft and the propeller itself.
To add the balancing weights, you can use the M6 holes provided on the upper side of the hub, which are also used for fixing of the spinner (5.6.1.P).
Alternatively, it is possible to add weights inside the positioning flange of the ogive or on the fixing screws of the ogive itself.

The dynamic balance IPS value must be noted in the prop logbook

6. OPERATING INSTRUCTIONS

The impact of foreign bodies on the blades during its operation can have serious effects on the integrity of the blades and cause serious damage. If this occurs, it is essential to land as soon as possible and subject the propeller to a complete overhaul.

The impact of the propeller with the ground can cause serious damage. If this occurs, it is essential to submit the propeller to a complete overhaul before making the next flight.

Exceeding the maximum permissible revolutions for a time exceeding 5 seconds represents a condition of potential risk for the integrity of the propeller: in case of exceeding the limit indicated in table 4.4.1.C the propeller must be subjected to a total overhaul before performing the next flight.

6.1. General Criteria for Use

To preserve the integrity and efficiency of your propeller, it is necessary to carefully follow the instructions for use described below.
During taxiing, avoid raising dust or gravel as much as possible, keeping a low number of revolutions when passing on stretches of track with sand or gravel.

6.1.1. Before Starting

Risk of burns: always carry out the pre-flight checks when the engine is cold.

Always make sure, before carrying out the checks, that the engine master relay is in the off position.

In case of anomalies found during the pre-flight checks, do not carry out the flight before having solved them.

a. General control

Carefully check each blade for cracks or impact damage.
Check the root of each blade, which must not show abnormal colours or accumulation of dust, a symptom of problems in retaining the hub.
Check that the propeller is not excessively dirty, so as not to affect its performance and avoid dynamic imbalances. Otherwise, clean it before the flight.

b. Play control

Firmly grasp the end of each blade and check that there is no abnormal play between blade and hub, both in the direction of rotation and in the direction orthogonal to rotation (therefore outside the rotation plane): in normal conditions there is no play so you feel any movement or you feel a movement of a few tenths of a millimetre; if necessary reduce play before flying.
Grasp each blade about half of its length and check the play on the pitch variation movement: a slight rotation is permissible. If necessary, restore correct clearance before flying.

c. Leak control

Check for oil leaks from the hub or between hub and blades. In particular, before moving the aircraft, it is a good idea to check if there are oil stains on the floor below the propeller. Small smears of grease along the blades are completely normal, especially at the beginning of the product life cycle or after maintenance interventions.

d. Oil level

Check the level of lubricant in the engine or in the reducer used to drive the blades, and top up if necessary. Too low an oil level could cause inconsistent and inadequate operating pressures for safe operation.

⚠ **If even one of these checks is not passed or if there are doubts, it is necessary to abandon the flight and carry out all the necessary checks on the ground.**

6.1.2. Before Flight

Once the warm-up is finished and before taking off, it is necessary to check the operation of the variable pitch system, as described below.

a. At a minimum pitch, set an intermediate number of revolutions, and operate the variable pitch system three times consecutively in order to increase it: this action is used to eliminate any air bubbles from the hydraulic system.

b. Then set the expected take-off revolutions on the pitch adjustment system.

6.1.3. Take-off

a. In the first moments of the take-off run, check that the engine is able to reach the maximum expected revolutions: otherwise, abort the take-off.

b. After the take-off and during the climb, gradually increase the pitch to gain speed, compatibly with aircraft performance.

c. If you hear noises related to resonances, immediately impose a different number of revolutions on the engine, to exit the condition.

6.1.4. Cruise

a. Once the aircraft has been levelled, set the cruising speed on the adjustment system and gradually adjust the position of the accelerator lever to obtain the desired speed.

b. Also, in this case, avoid regimes that can cause resonance phenomena in the structure of the aircraft or propeller, which can be perceived as cyclical noise.

A

Flying for a long time in such conditions can cause serious damage to the structure of the aircraft, the propeller or the engine itself, putting its integrity at risk.

6.1.5. Landing

Set the minimum pitch on the adjustment system during the descent for landing, in order to obtain a good braking effect from the propeller and to prepare the propeller for a possible go-around. In constant-speed systems, this condition is achieved by setting the take-off revolutions which, if not reached, will set the propeller to the minimum pitch.

6.2. Behavior in Case of Emergency

- <u>Pitch lock in minimum position</u>

Reduce the engine speed so as not to overheat the thruster but to maintain a safe speed for flight; conclude the flight as soon as possible and look for the cause of the failure before making another flight.

- Pitch lock in position other than minimum

Continue the flight while maintaining an adequate safety speed; for landing, consider the use of long runways to compensate for the lack of propeller brake during landing.

A In the event that the block occurs on a particularly high pitch, a go-around may not be possible due to lack of adequate power: this must be considered when choosing the landing runway.

- Sudden strong vibrations while cruising

Reduce the pitch and engine load; look for a place to land as soon as possible. In the event of vibrations that may affect the integrity of the aircraft, turn off the engine and prepare for an emergency landing.

- Sudden strong vibrations during take off

If there is still time to abort take off; if not, as soon as the flight conditions permit, reduce the load and try to land as soon as possible.

- Vibration at minimum pitch and reduced load

This condition can occur during landing: conclude the landing and check the play of the blades.

- RPM oscillation

Reduce the pitch and engine load and check if the problem remains. If so, land as soon as possible and have the control system reviewed. If the problem disappears, continue the flight avoiding setting the rpm/load combination that causes the oscillation.

- Over speed

Set a lower number of RPM and a lower load, so as to continue flying within the maximum number of revolutions allowed for the propeller and engine; land and adjust the minimum mechanical pitch on the propeller in such a way as to avoid a recurrence of the condition. In the event that the overspeed concerns the propeller, it is necessary to subject the latter to a complete overhaul before making a new flight.

- Difficulty maintaining high pitch values

Reduce engine load and pitch and continue flight; once landed check the setting of the maximum mechanical pitch, which may be insufficient to achieve the required performance; alternatively, check the pitch adjustment system and the oil level of the system.

6.3. Communication of Operating Anomalies

Any anomaly must be identified and resolved before proceeding to a new mission.

In order to improve and resolve any recursive defects, it is mandatory that the user communicate the anomalies found and their resolution, or any other consideration that can improve the safety in the use of the propeller and the clarity of the information in this manual contained.
Communications must be produced by completing the form reproduced below, which can be downloaded at www.mwfly.it, and sent to the most convenient MWfly authorized service centre, or directly by e-mail to info@mwfly.it.

Anomaly Communication Form			
Name		*Last name:*	
Phone Number:		*E-mail*	
Date		*Prop. model*	
Prop. Serial n.		*Flight hours*	
Aircraft manufacturer		*Aircraft model*	
Type of use	*Mission <1h* ☐	*Mission >1h* ☐	*School* ☐
Frequency use	*Occasional* ☐	*weekly* ☐	*Daily* ☐
Avarage enviromental temp.	*>35°C* ☐	*>10 e <35°C* ☐	*<10°C* ☐
Recursion	*Occasional* ☐	*Frequent* ☐	*Permanent* ☐
Description of the anomaly			

6.3.1.C

7. MAINTENANCE

Any interventions performed with criteria other than those described below can be very dangerous for safety and harmful to the integrity of the propeller, and should be absolutely avoided.
Non-compliant maintenance interventions lead to the revocation of the warranty on the propeller and its components and free MWfly from any obligation or liability.

Only qualified technicians trained on the particular type of propeller are authorized to carry out maintenance and repair work.

All safety sealing elements, such as self-locking nuts or washers must be installed according to the prescriptions and replaced at each disassembly: this is to guarantee the function of safety elements.

At the end of the maintenance operations, both ordinary and extraordinary, it is necessary to carry out the propeller test on the ground (C.5.7.).

Also consider the directives contained in the service bulletins according to their priority with respect to what is described in the manuals.

7.1. Premise

This section lists the periodic inspections to be performed after a certain number of operating hours have expired.
The 10-hour inspection must be performed only after the first 10 hours of operation from a new or overhauled propeller.
Periodic inspections of 50, 100, 200, 400 hours are to be carried out at the end of the hours indicated and at the respective multiples of hours; in detail:

- 50-hour inspection: carry out at 50, 100, 150, 200,…. hours
- 100-hour inspection: carry out at 100, 200, 300, 400,…. hours
- 200-hour inspection: carry out at 200, 400, 600, 800,…. hours
- 400-hour inspection: carry out at 400, 800, 1200,… hours

At each periodic inspection, the checks envisaged by all the scheduled inspection intervals or by multiples of the same must be carried out: for example, at the 200-

hour inspection, the checks provided for by the 200-hour inspection must be carried out, but also those provided for by the inspection of 100 and 50.
The prescribed intervals are applicable to propellers used in temperate climates and with operating cycles that comply with the specifications in the manuals: in the case of intensive use (for example piloting schools) or in areas with extreme climates (arid areas or areas with a harsh climate) the intervals should be halved.

In addition to these checks, it is necessary to carry out the pre-flight checks specified in paragraph 6.1.1. and as recommended by common aeronautical practice.

7.2. General Rules for Maintenance

The interventions envisaged in the scheduled maintenance table must be carried out according to the criteria specified below.

- All controls are visual unless otherwise specified.
- All activities must be carried out within the maintenance deadline, with a maximum tolerance of 10 hours
- If the tolerance hours are in excess, they cannot be combined: this means that, for example, if the 100-hour surgery was performed at 110 hours, the next 200-hour operation cannot be performed at 210 + 10 hours, but at most at 200 + 10 hours.
- If the hours of tolerance are lacking, the subsequent intervention must be performed at a maximum interval of hours equal to what there would be without considering that the tolerance has been applied: this means that, for example, if the intervention of 100 hours is was performed at 90 hours, the next 200-hour intervention cannot be performed at 200 ± 10 hours, but at most at 190 ± 10 hours.
- All the activities foreseen in the maintenance table must be carried out in compliance with what is specified in this manual. If doubts or doubts arise, it is necessary to integrate the information with what is reported in other manuals or contact an authorized service centre.
- All spare parts of the propeller (gaskets, bearings, sliding bushings) must be original and found at the MWfly service network: the use of non-original spare parts automatically invalidates any form of warranty.

7.3. Propeller Logbook

The propeller logbook is delivered together with each propeller and must also accompany it in case of sale.

The loss of the logbook or the incomplete compilation of the same causes the revocation of any form of guarantee, as it makes the operational and maintenance history of the propeller uncertain.

The following information must be noted in the appropriate spaces in the propeller logbook.

- Scheduled maintenance interventions
- Unscheduled maintenance interventions
- Total or partial revision
- Adjustments and balances values
- Replacement of components not included in the scheduled maintenance plan
- Change of ownership
- Application of service bulletins or alert bulletins

Propellers or components eventually disembarked from the aircraft and sent to the service centres for maintenance or overhaul must be accompanied by the logbook.

7.4. Control Tightening Torques

Table 7.4.1.C is provided below, which indicates the tightening torques of the propeller: for the check it is necessary to use a torque wrench and make sure that the ambient temperature (and of the propeller) is between 10 and 30 ° C.

Check the tightening torque by applying the torque in the normal direction of screwing.

Legend

- WT = Weak Threadlocker
- MT = Medium Threadloker
- O = optional

Type of screw or nut		Tightening torque [Nm]
Hub breather screw (M4)		4 + WT
Rear spinner plate fixing screw (M5)	[O]	6 + WT
Sliding pad fixing screw (M5)		6 + FM
Front spinner plate fixing screw (M6)	[O]	8 + FD
Blade retaining ring nut tightening screw (M6)		10 + MT
Nut fixing screw for maximum pitch adjustment (M6)		10
Spinner centring tip fixing screw (M6)	[O]	8 + MT
Rod fixing screw (M8)		25
Blade union screw (M8)		22
Engine propeller flange hub fixing screw (M8)	[O]	25
Hub union screw (M10)		42
Engine propeller flange hub fixing screw (UNF 1/2 "-20)		35
Blade retained ring		12

7.4.1.C

7.5. Scheduled Maintenance

Perform the checks and replacements listed in Table 7.5.1.C at the intervals indicated. Unless otherwise specified, the applicability of the prescribed terms is valid for all versions of the propeller.

Legend

- X = execute when the indicated hours are reached
- P = pre-flight check
- 10 = carry out after the first 10 hours of operation from new or after disassembly

Activity	Reference	Term (hours)					
		P	*10*	*50*	*100*	*200*	*1000*
Check blade clearance	6.1.1.(b) 7.5.7. 7.5.8.	X			X		
Blade cleaning	6.1.1.(a) 7.5.1.	X					
Check the integrity of the blades	7.5.3.			X			
Check oil leakage and drive oil level	6.1.1.(c) 6.1.1.(d)		X	X			
Check the tightening of the propeller fixing bolts	5.3.3.		X		X		
Check the tightness of the screws joining the blades and the hub	5.2.		X		X		
Tracking blades	5.4.1.					X	
Mechanical greasing	7.5.9.					X	
Sliding pads replacement	7.5.10.						X
Seals replacement	7.5.11.						X
Replacement of blade support	7.5.12.						X

7.5.1.C

7.5.1. Cleaning

Regularly clean the propeller: thorough cleaning also allows you to inspect its parts, facilitating the identification of any anomalies or damage.

Before washing the propeller, make sure that the master relay is in the off position.

Necessary materials

1. Product "remove midges" for motorcycle helmets
2. Slightly abrasive sponge
3. Water
4. Car shampoo
5. Silicone-free car wax
6. Basin

Do not use caustic or flammable substances for washing the propeller.

During washing, many pollutants mix with the water: prevent these substances from being released into the environment. It is advisable to place the aircraft above a collection basin so as not to disperse liquids and dispose of them in accordance with current legislation.

a. Wait for the engine to cool down.

b. Identify any leaks, usually located between the flange and hub.

c. Apply the product [1] on the still dry propeller, especially on the back of the blade and on the leading edge; wait about 3 minutes.

d. Prepare a mixture of water [3] and shampoo [4] in the basin [6].

e. Rub [2] the blades, using a little water. If necessary, reapply the product [1].

f. Also clean the hub parts with the soaked sponge.

g. Rinse the blades and the hub with the sponge and plenty of water.

Avoid washing the propeller with jets of water or steam under high temperature pressure, which can cause harmful infiltration of water inside the hub.

h. Wait for the propeller to dry.

i. Apply the wax evenly [5]: this operation must be repeated at least once a year, and serves to make the surface of the blades less adhesive to foreign bodies.

After each cleaning operation of the propeller, before making a flight, it is necessary to ensure the perfect state of efficiency of the pitch variation system (5.7.).

7.5.2. Propeller Functional Check

At the intervals specified in the maintenance table (7.5.1.C), in the event of abnormal vibrations or accidental impacts of the propeller, it is necessary to perform a functional check of the propeller, to be carried out as specified below.

a. Check the integrity of each blade (7.5.3.).

b. Firmly grasp the end of each blade and check that there is no abnormal play between blade and hub, both in the direction of rotation and in the direction orthogonal to rotation (therefore outside the rotation plane): in normal play conditions there is no you feel any movement or you feel a movement of a few tenths of a millimetre; if necessary, reduce play.

c. Hold each blade at about half of its length and check the play on the pitch variation movement: a slight rotation (maximum of 0.3 °) is admissible. If necessary, restore the correct play.

d. With the help of a second person, hold each blade with two hands, about halfway along the length, and exert force to increase the pitch: the movement must be free of jamming. If the check is unsuccessful, it is necessary to replace the supports of the blades, the control rod and the operating piston.

e. Leaving the blades once the maximum pitch is reached, the blades must return to the minimum pitch position. If the check is negative, it is necessary to check the integrity of the return springs and sealing elements.

f. Check for oil leaks from the hub or between hub and blades. Small smears of grease along the blades are completely normal, especially at the beginning of the product life cycle or after maintenance interventions.

g. Check that there is no abraded area on the hub or with the presence of metal dust: in particular check the area of insertion of the blade groups into the hub and the fixing surface of the hub to the engine propeller flange. If the verification fails, the propeller must be overhauled by a service centre.

h. Check, and if necessary restore, the correct tightening torque of the blade union and hub union screws (7.4.1.C).

i. Check, and if necessary restore, the correct tightening torque of the screws fixing the hub to the motor flange (7.4.1.C).

j. Check the correct tightening of the locking nuts of the maximum pitch adjustment screws (7.4.1.C).

k. If present, check the state of the spinner and the system for fixing it to the hub.

7.5.3. Check the Integrity of the Blade

At the maintenance intervals provided in table 7.5.1.C or as a result of accidental impacts or overspeed, it is necessary to check the integrity of each blade, as described below.

In case of doubts about the outcome of the check, the propeller must be sent to a service centre for the necessary assessments and any replacements.

a. Carefully check the engagement area of the metal root blade.

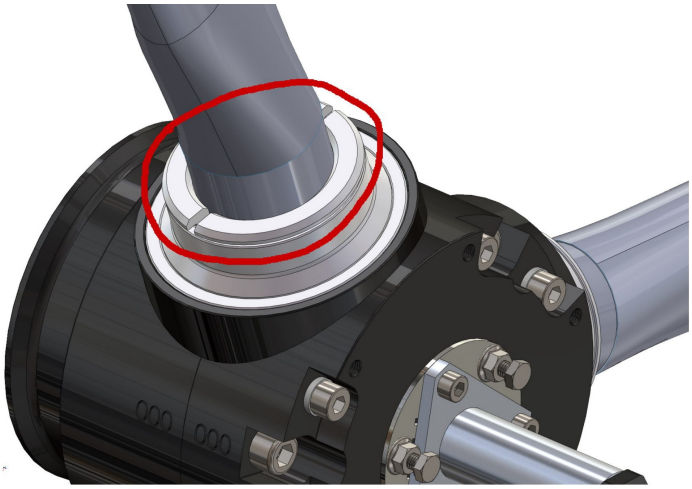

7.5.1.P

b. This area is particularly critical from the point of view of stresses: there must be no cracks, neither on the structural part of the blade, nor on the gluing. Likewise, there must be no dark dust in any kind of relative movement. Small scratches on the paint are admissible, although it is good, in this case, to check that the extension does not increase over time.

c. Carefully check the entire surface of the blade, both on the front and on the back: there should be no dents deeper than half a millimetre. Such dents can be repaired with epoxy and glass-based filler. Any repairs must be noted in the propeller logbook.

After any repairs, the propeller must be balanced again.

c. The leading edge of the blade, even if equipped with armor, may be slightly abraded and speckled, as a result of the impact of drops of water or sand.

d. Check the tracking of each blade (5.4.1.). If the value is outside the specified limit, the blade must be replaced.

7.5.4. Propeller Removal

To perform maintenance work safely, it is necessary to remove the propeller from the aircraft. Removal must be carried out by carrying out the operations described below.

Necessary materials

1. Open wrench ¾”
2. Allen key 6mm
3. Basil
4. Bubble wrap for packaging

a. Place the aircraft on a level surface, disconnect the electrical contacts from the battery and, if possible, brake it and wait for the engine to cool down adequately.

b. Protect the blades by wrapping them with bubble wrap [4], to prevent them from being damaged.

c. Place a collection basil for the oil [3] below the joining surface between the hub and the engine propeller flange, in order to collect the oil that will come out of the propeller shaft once the hub is removed.

d. Rotate the propeller by hand so as to have the blades at 9 and 3 o'clock (in the case of two-blade propellers) or at 10, 2 and 6 o'clock (in the case of three-blade propellers).

e. Loosen [1] ([2] for Rotax type flanges) the fixing screws with crossed pattern; be careful not to lose the safety washers, which can be reused.

f. Remove 5 of the six retaining screws.

g. With one hand, hold the propeller firmly in position on the engine propeller flange; with the other hand remove the sixth screw retaining the propeller.

h. Grasp the two highest blades with both hands and carefully extract the propeller from the flange; a small amount of oil will come out of the propeller shaft and hub.

i. Rest the propeller on the mounting surface.

j. Remove the two drive pins from the flange or propeller hub, and keep them for reassembly.

7.5.5. Removing the Blades from the Hub

The removal of the blades from the hub must be done according to the following procedure.

Necessary materials

1. Allen key 5mm
2. Allen key 6mm
3. Allen key 8mm
4. Bi-hex socket wrench 17mm

a. Place the propeller on a large surface, which contains it completely in its entire width: this warning is to prevent the blades from accidentally falling once the hub is opened.

b. Place the propeller on the front, and completely unscrew [2] the rod tightening screw. Remove it together with the lock washer, which can be reused.

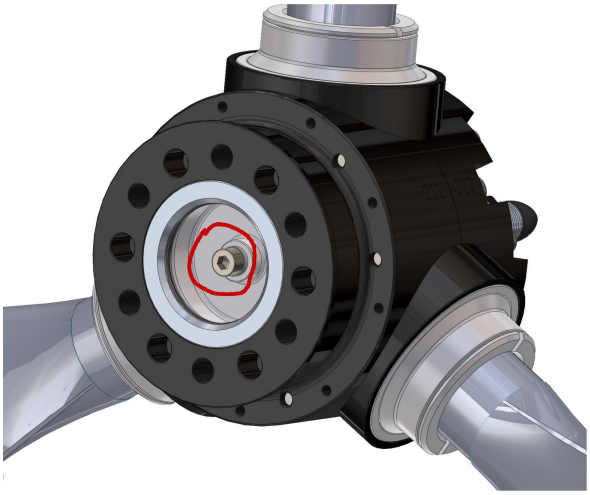

7.5.2.P

c. Rotate the propeller and place it on the top on the back.

d. Remove [1] any spinner positioning tip by unscrewing the three fixing screws.

e. Loosen [4] the minimum pitch adjustment nut, leaving about 5 threads engaged on the control rod.

f. Remove [2] the M8 blade union screws.

g. Remove [3] the M10 hub union screws.

h. Completely remove [4] the minimum pitch adjustment nut from the control rod.

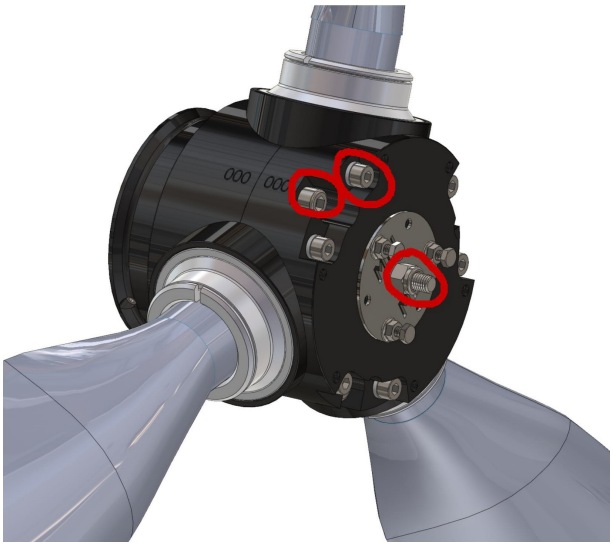

7.5.3.P

i. Lift the front part of the hub according to the direction of the union screws and separate it from the lower part of the hub; the blades will remain at the bottom of the hub.

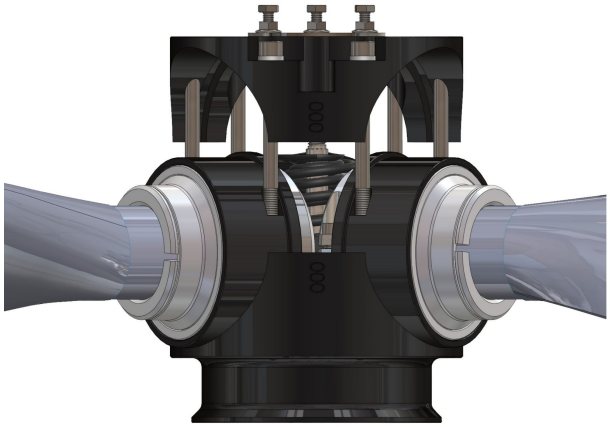

7.5.4.P

j. Remove the two reaction springs.

k. Take note of the position of each drive pad in the respective housing (5.4.3.P), so that you can reuse the same position when reassembling (if it is not necessary to correct the pitch error).

l. Act on the blades in such a way as to raise them, together with the control rod.

m. Carefully extract each blade from its respective position on the control cam: the control pads can indifferently remain integral with the blade or with the driving pin.

n. Reintroduce the control rod into the hub support and push after lifting the hub from the surface: in this way the control piston will come out of its housing.

o. Extract the control rod again from the rear of the hub.

7.5.6. Overhaul of the Blade Group

The blade group consists of the elements shown in the figure.

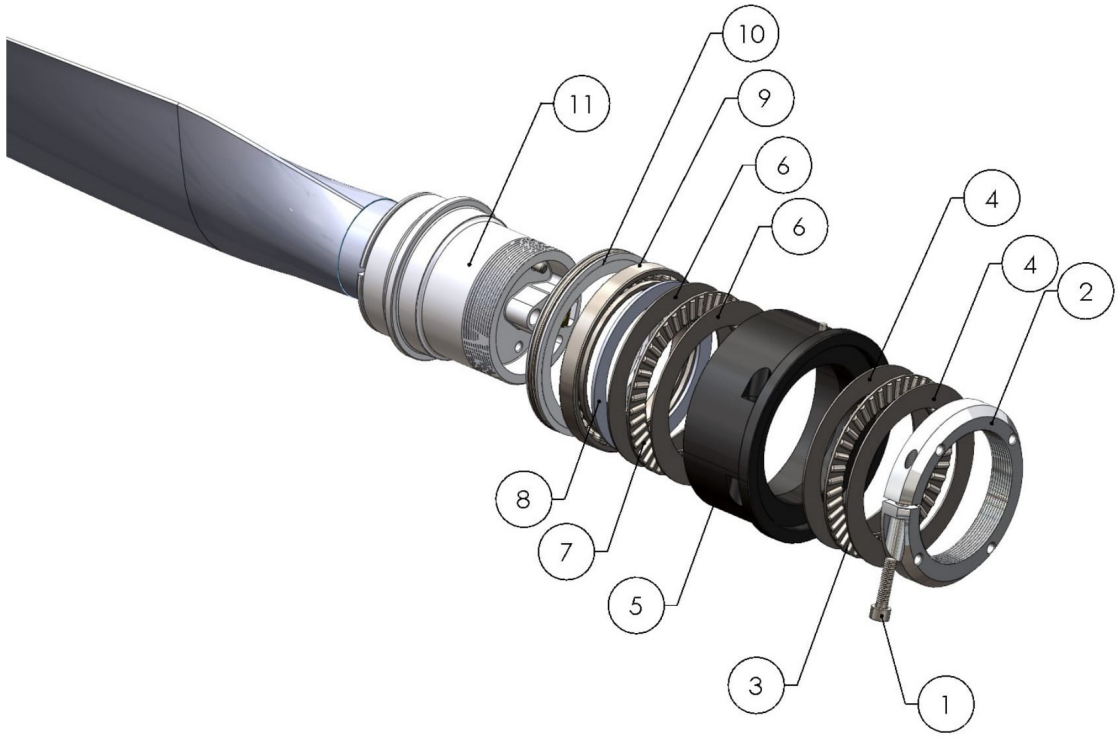

7.5.5.P

	Description	*Quantity*
1	Blade retaining ring nut locking screw	1
2	Blade retained ring	1
3	Lower bearing with axial blade retention	1
4	Lower bearing thrust bearing axial blade	2

5	Blade butt	1
6	Upper bearing thrust bearing axial blade	2
7	Upper bearing with axial blade retention	1
8	Radial retained lower bearing spacer	1
9	Radial retained bearing	1
10	Upper spacer	1
11	blade group	1

7.5.2.C

Disassembly and reassembly of the blade unit must be carried out according to the following procedure.

Necessary materials

1. Allen key 5mm
2. Wrench for tightening the blade retaining ring nut cod. X459
3. Toque wrench 0-50Nm
4. Medium thread loker

a. Clean the blade foot # 1 of excess grease, using an alcohol-soaked rag.

b. Unscrew [1] and remove the locking screw of the blade retaining ring nut.

c. Using the specific wrench [2], remove the blade retaining ring nut.

d. Remove the lower blade axial retaining bearing, together with the two backup washers.

e. Remove the blade from the butt.

f. Remove the upper blade axial retaining bearing from the blade shank, together with the two support washers and the lower radial retaining bearing spacer.

It is possible that the axial and radial bearings remain integral with the butt instead of the blade shank.

g. Remove the radial blade retaining bearing and the upper spacer from the blade shank.

h. Replace or grease the removed components and reassemble. Particular attention must be paid to avoiding pinching the O-ring on the upper spacer when inserting it into the butt.

i. Finish the assembly by tightening [2 + 3] the locking ring nut to the torque prescribed in table 7.4.1.C.
j. Finally tighten [1 + 3] the locking screw of the retaining ring to the prescribed torque (7.4.1.C), using a thread locking compound [4].
k. Repeat the operations for the remaining blade groups.
l. Record the intervention carried out in the propeller booklet.
m. Before reassembly, grease the components (7.5.9.).

7.5.7. Reduction of the Blade Play in the Hub

At the prescribed maintenance intervals or in the event that vibrations are felt at a minimum pitch, it is necessary to reduce the play of the blade in the hub, restore the correct preload value of the axial thrust bearings. Then proceed as follows.

Necessary materials

1. Allen key 5mm
2. Wrench for tightening the blade retaining ring nut cod. X459
3. Torque wrench
4. Medium threak loker

a. Remove the propeller from the aircraft (7.5.4.).
b. Remove the blades from the hub (7.5.5.).
c. Wash all components to completely remove any residual old grease. Kerosene can be used for washing.
d. Unscrew [1] and remove the locking screw of the blade retaining ring nut: refer to figure 7.5.5.P
e. Adjust [2 + 3] the blade retaining ring to the correct torque value (7.4.1.C).
f. Tighten the M6 locking screw of the blade retaining ring nut to the correct torque value (7.4.1.C) using a suitable locking compound [4] and interposing the safety washer provided.
g. Repeat the operations for the remaining blades.
h. Before reassembly, grease the components (7.5.9.).

7.5.8. Reduction of the Blade Play on the Pitch

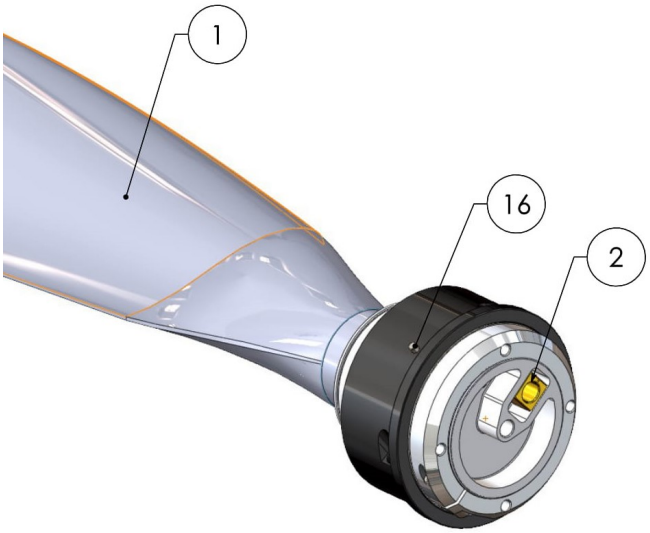

7.5.6.P

	Description	Quantity *
1	Blade group	(2) 3
2	Blade control pad	(2) 3
16	Blade positioning pin	(2) 3

** in brackets () quantity for two-blade version*

7.5.3.C

Following prolonged use, especially in conditions of poor greasing of the pitch variation mechanics, sliding wear may occur between the blade control pad (2) and the respective guide on the blade assembly (1): this wear causes an increase of the blade clearance around the rotation axis due to the variation of the angle of attack, which, in some flight conditions, produces vibrations. This play can be reduced by installing oversized sliding pads.
If the clearance is such as to allow a free rotation of the blade greater than 0.5 °, it is therefore necessary to reduce it, proceeding as follows.

A

Following the installation of oversized pad to reduce the play, it will no longer be possible to decrease the minimum pitch or increase the maximum pitch of the propeller: in fact, such changes could cause the blocking of the pitch variation mechanism.

Necessary material

1. feeler gauge from 0.05mm to 0.5mm

a. Remove the propeller from the aircraft (7.5.4.).
b. Remove the blades from the hub (7.5.5.).
c. Wash all components to completely remove any residual old grease. Kerosene can be used for washing.
d. Place the blade control pin in the centre of the control stroke.
e. Check the existing play by introducing the thickness gauge [1] between the control pad and the respective guide.
f. Check that this thickness can be introduced along the entire run of the pad within the respective guide.
g. Note the maximum thickness that can be introduced along the entire stoke of the pad within the guides.
h. Repeat the operations for the remaining blades.
i. Communicate the clearance detected on each groove to the service centre to obtain the spare part with the correct increase. The starting condition for each blade (i.e. the value of any previous increases or the absence of any increases) must also be communicated together with the clearance detected.
j. Write down the increase value of each blade in the propeller logbook.

7.5.9. Greasing

At the prescribed maintenance intervals, it is necessary to grease the mechanics of the hub and the blade movement. To carry out this operation it may be necessary to disassemble the components: the instructions for carrying out such disassembly are referred to in the appropriate paragraphs.
The grease to be used must have the following characteristics:

- suitable for use on bearings and sliding guides;
- suitable for use at low temperatures
- good viscosity characteristics, to prevent early release from the application areas;
- good corrosion protection characteristics;
- good resistance to washout;
- inert on plastic or rubbery materials.

A suitable grease is Aeroshell grease 22, compliant with MIL-G-81322E specifications.

To correctly follow greasing, follow the instructions below

a. Remove the propeller from the aircraft (7.5.4.).
b. Remove the blades from the hub (7.5.5.).
c. Remove each blade assembly (7.5.6.).
d. Wash all components to completely remove any residual old grease. Kerosene can be used for washing.
e. Apply grease to the axial and radial blade retaining bearing cages: refer to figure 7.5.5.P.
f. Apply grease to the thrust bearing washers, on both sides: refer to figure 7.5.5.P.
g. Apply the grease on the O-ring of each blade group.

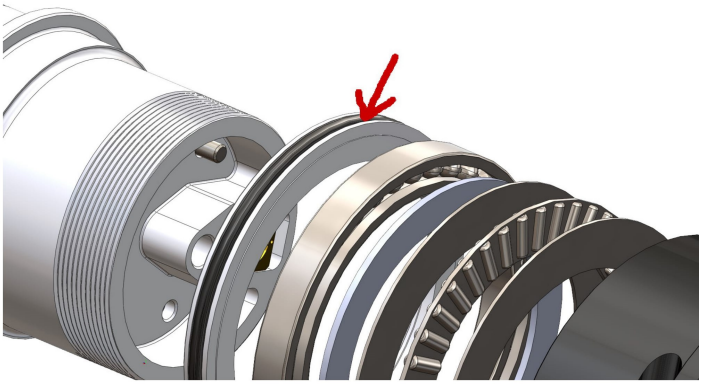

7.5.7.P

h. Apply grease to the control piston guide band and seal.

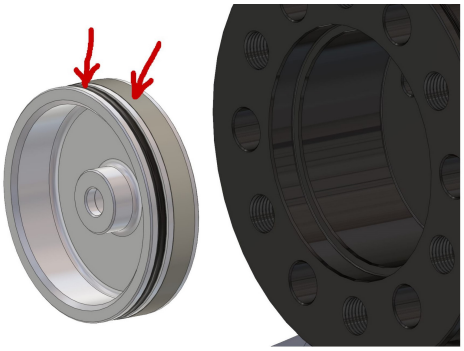

7.5.8.P

i. Apply grease on the cam support pad and on the blade control pads, both in the hole and on the external surfaces.

7.5.9.P

j. Apply the grease on the control rod.

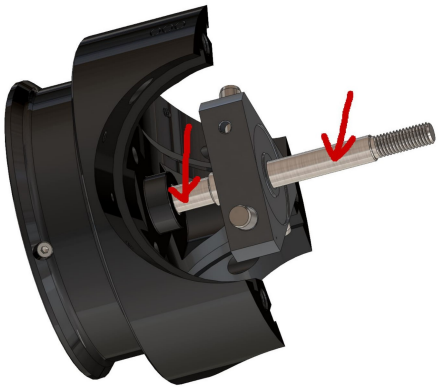

7.5.10.P

k. In the event that reassembly is not carried out at the same time as greasing, all components must be protected from dust while waiting to be reassembled.

7.5.10. Sliding Pads Replacement

At the prescribed maintenance intervals, it is necessary to replace the blade sliding pads and the cam supporting pad.

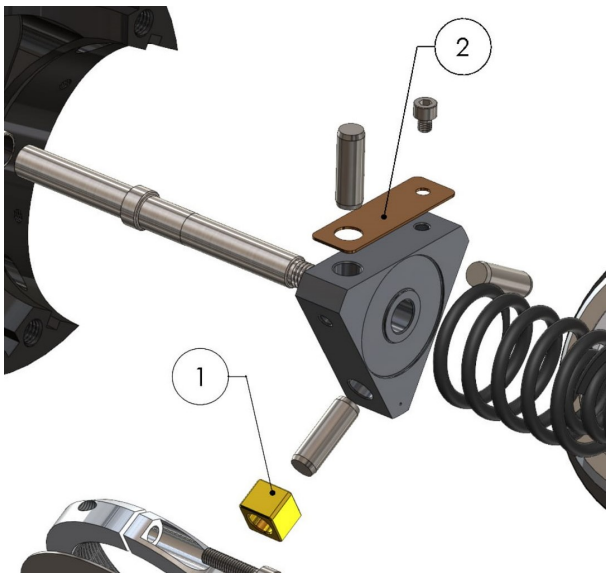

7.5.11.P

	Description	Quantity *
1	Blade sliding pad	1
2	Cam sliding pad	(2) 3

** in brackets () quantity for two-blade version*

7.5.4.C

Then proceed as follows.

Necessary materials

1. Allen key 4mm
2. Torque wrench 0-50Nm
3. Medium thread locker

a. Remove the propeller from the aircraft (7.5.4.).

b. Remove the blades from the hub (7.5.5.).

c. Wash all components to completely remove any residual old grease. Kerosene can be used for washing.

d. Unscrew [1] and remove the locking screw of the cam support pad.

e. Remove the pad from the drive pin and replace it with a new one; the pad must be replaced to its original position.

f. Tighten [1 + 2] the pad retaining screw to the prescribed torque (7.4.1.C), also using a thread locker compound [3].

g. Check the position of the reference of each blade sliding pad with respect to its seat (5.4.3.P).

h. Replace the sliding pad in each blade butt; if you do not want to change the pitch error, each new pad must be positioned with the reference in the same position as the one removed.

i. Note the replacement made in the propeller logbook.

j. Grease the replaced components before reassembling the propeller (7.5.9.).

7.5.11. Seals Replacement

At the scheduled maintenance intervals, or in the event of a loss of lubricant or grease, the sealing elements must be replaced.

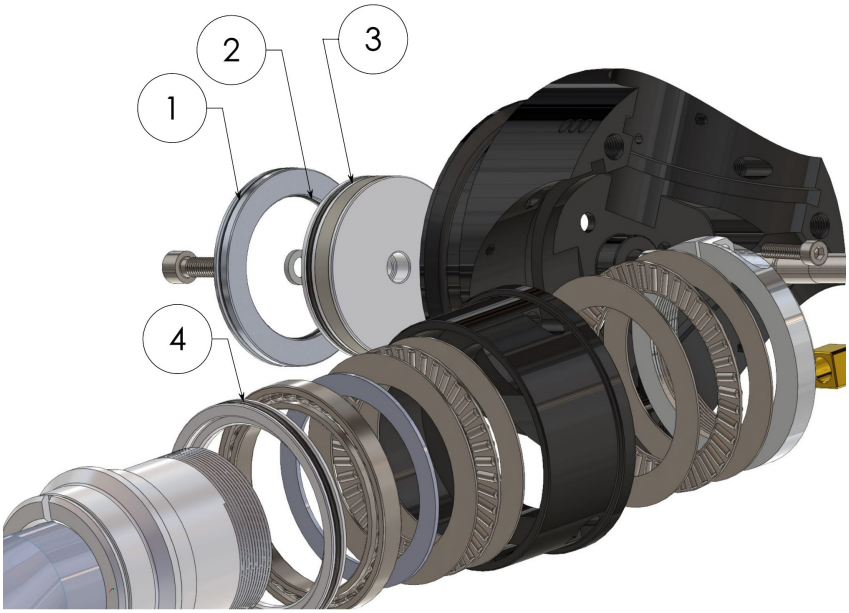

7.5.12.P

	Description	Quantity *
1	External flange adapter O-ring	1
2	Drive piston O-ring	1
3	O-ring outer blade spacer	1
4	Internal flange adapter O-ring	(2) 3

** in brackets () quantity for two-blade version*

7.5.5.C

To replace, proceed as follows.

a. Remove the propeller from the aircraft (7.5.4.).
b. Remove the blades from the hub (7.5.5.).
c. Remove each blade assembly (7.5.6.).
d. Wash all components to completely remove any residual old grease. Kerosene can be used for washing.
e. After removing the seals, carefully clean the seats before reassembling the new seals.
f. Assemble and new seals after having lightly greased the surface.
g. Properly grease the seals before reassembling the component (7.5.9.).
h. Insert the seals into the counterpart of the piece on which they are housed, taking great care not to pinch them on the edge.
i. Note the replacement made in the propeller logbook.
j. Before reassembly, grease the components (7.5.9.).

7.5.12. Replacement of Bearing

At the scheduled maintenance intervals, or in case of inaccurate operation of the pitch variation, it is necessary to replace the bearing, located inside the hub and inside each blade.

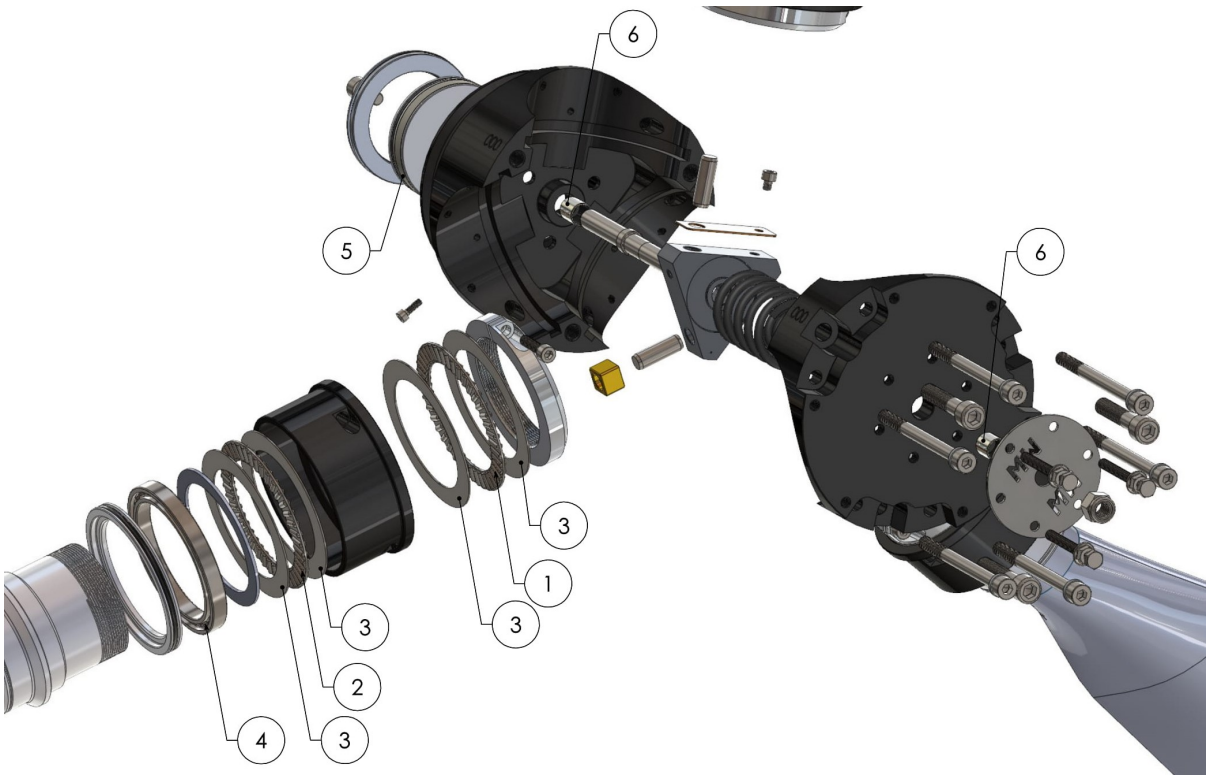

7.5.13.P

	Descriprion	Quantity *
1	Lower thrust bearing retained blade	(2) 3
2	Upper thrust bearing retained blade	(2) 3
3	Bearing washer for axial retaining bearings	(8) 12
4	Radial blade retention bearing	(2) 3
5	Driving piston guide band	1
6	Control rod sliding bushing	2

** in brackets () quantity for two-blade version*

7.5.6.C

To replace, proceed as follows.

Necessary materials

1. Punch with flat tip and 13.5mm diameter
2. Punch with flat tip and 20mm diameter
3. Extraction bushing with internal diameter of 15mm
4. Hammer 500 gr

a. Remove the propeller from the aircraft (7.5.4.).
b. Remove the blades from the hub (7.5.5.).
c. Wash all components to completely remove any residual old grease. Kerosene can be used for washing.
d. Remove the driving piston guide band (5) from the seat, widening it.
e. Carefully clean the seat of the guide band with a rag to remove any possible residue.
f. Install the new guide band in its seat, wrapping it delicately around the seat, and making sure it fits perfectly.
g. Using the punch [1], the extraction bushing [3] and the hammer [4], extract the sliding bushing of the rod (6) from the rear half of the hub: the direction of extraction is indifferent.
h. Repeat the same operation on the front half of the hub.
i. Insert [4] the new bushings in the seats of the front and rear hub, using the punch [2] as a beater: grease the parts beforehand. The introduction should take place from the inside of the two halves.
j. After eventually replacing the sealing gasket (7.5.11.) And greasing the components (7.5.9.), Insert the piston inside the chamber obtained on the hub, taking great care not to pinch the sealing band and the gasket. Also pay attention to the direction of introduction (first the band must enter and then the gasket).
k. Remove each blade group (7.5.6.).
l. The axial bearings will break down (1,2,3) upon disassembly of the blade assembly. The radial bearing (4) can remain indifferently housed on the hub or in the seat on the bushing: in any case, to extract it, it will be sufficient to pull hard.
m. Reassembly must take place respecting the order of the parts shown in figure 7.5.5.P and after having carefully cleaned the bearing seats to remove any possible residue. The parts must not be forced into their seats, nor deformed.
n. Note the replacement made in the propeller logbook.
o. Before reassembly, grease the components (7.5.9.).

7.6. Unscheduled Maintenance

A

All adverse events that produce unscheduled maintenance must be noted in the propeller logbook.

In the event of failures or non-compliant events during the operation of the propeller, it is necessary to carry out a thorough check before the next flight. In case of doubts about the outcome of the checks or in case of repairs, it is necessary to contact a service centre for a general overhaul.

7.6.1. Impact or Suspected Impact with Foreign Bodies

The impact or suspected impact with foreign bodies can occur indifferently with the propeller stationary or in motion. Events attributable to this case include:

- collisions with the ground;
- large bending of the blades induced by incorrect handling in the hangar;
- flight in the presence of hail or heavy rain;
- impact with gravel;
- collisions with birds.

In this case, before carrying out the next flight, the propeller must be subjected to an accurate check of the integrity of the blades, according to the recommendations of paragraph 7.5.3.

7.6.2. Electrocution

In the event that, during the flight, there is the suspicion that lightning has struck one or more blades, proceed as follows.

a. Land as soon as possible.

b. Wait for the engine to cool down and disconnect the master relay.

c. Remove the spinner.

d. Check for the absence of dark or slightly abraded areas, especially near the maximum diameter of the propeller and near the coupling of the blades in the hub.

e.

- If these areas are not visible, the flight can be terminated by having the propeller examined by a service centre before the next flight.
- If these areas are visible, the propeller is to be considered no longer suitable for flight, and therefore the mission must be interrupted. These propellers must be sent to a service centre for necessary repairs and replacements.

7.6.3. Strong Vibration During the Flight

If you feel abnormal vibrations during the flight, land as soon as possible and carry out the following checks.

- Check blade play (6.1.1 (b)).
- Check the integrity of the blade (7.5.3).
- Check pitch error (5.4.2).
- Dynamic balancing check (5.7.1).

Following the checks, correct any defect found before resuming the flight. In the event that no anomaly is found, the propeller is no longer suitable for flight and must be delivered to a service centre for the necessary checks and replacements.

7.6.4. Overspeed

The rpm limit for each propeller model is shown in table 4.3.1.C.

- If this limit is exceeded by no more than 5% of the value and for no more than 15 seconds, before proceeding to the next flight it is necessary to carry out the checks provided for in paragraph 7.5.3.
- If the rpm value reached by the propeller is 5% higher than the limit indicated in table 4.3.1.C or, even if it is lower, it has been maintained for more than 15 seconds, the propeller must be considered not more suitable for flight and sent to the service center for necessary repairs and replacements.

7.7. Preservation and Resumption of Service After Prolonged Inactivity

In case of foreseen prolonged inactivity, proceed as follows.

a. Carefully clean the blades (7.5.1.).

b. If close to expiry (7.5.1.C), grease the propeller to avoid corrosion of the supports.

c. Spray a Teflon-based spray on the blades, on the control rod and on the bolts fixing the hub to the engine propeller flange, to protect them from encrustations and oxide.

d.

- If using two-blade propellers, rotate the blades by hand until the blades are positioned in a horizontal position.
- In the case of using three-blade propellers, the three blades must be positioned in such a way as to have one at 12 o'clock: possibly every two months, change the blade in vertical position.

This warning helps to keep critical parts properly greased and to prevent grease from escaping at high temperatures.

e. Cover the surfaces of the blades appropriately, to protect them from the action of rodents.

f. Manually rotate the blades in the hub every six months, in order to increase the angle of incidence; to carry out the operation it is advisable to seek help from a second person.

This operation is useful to avoid sticking of the sealing elements

When the service is resumed, a series of checks must be carried out, as specified below.

a. Perform a functional test of the propeller (7.5.2.).

b. Perform the installation verification test (5.7.).

7.8. Precautions for Use in Extreme Environments

To use the propeller in environments with extreme operating conditions, the following precautions must be applied.

- When used in arid and dusty areas, all maintenance intervals must be halved. In particular, it is necessary to perform cleaning and greasing of the propeller more frequently, as well as checking the integrity of the blade.
- If used in very hot areas, it is necessary to halve the propeller greasing deadlines and use a particularly compact grease.
- In case of use in wet areas or with saltiness, it is advisable to use a protective Teflon spray, to be sprayed periodically on the blades and on the metal parts of the hub.
- In case of use in harsh climates, use a less compact grease to grease the propeller. It may also be necessary to use a hydraulic fluid of lower thermal grade for the drive.
- In the case of use in areas with a large temperature range, it is advisable to halve the tightening check intervals.

8. SIGNATURES AND LIST OF REVISIONS TO THE DOCUMENT

Compiled and Checked on	*by*	*Signature*
21/04/2022	*Guido FANTINI*	

Approved on	*by*	*Signature*
01/09/2023	*Stefano Marella*	

Ed.	*Rev.*	*Applicability*	*Section*	*Page*	*Date*
A	1	From #0001	1. Summary	All	01/09/2023
A	1	From #0001	2. Introduction	All	01/09/2023
A	1	From #0001	3. Security	All	01/09/2023
A	1	From #0001	4. Description	All	01/09/2023
A	1	From #0001	5. Installation	All	01/09/2023
A	1	From #0001	6. Operating instructions	All	01/09/2023
A	1	From #0001	7. Maintenance	All	01/09/2023